Form10/00

HITACHI

UK ABWR

Document ID	:	GA91-9101-0101-20000
Document Number	:	XE-GD-0652
Revision Number	:	C

UK ABWR Generic Design Assessment

Generic PCSR Chapter 20 : Radiation Protection

Hitachi-GE Nuclear Energy, Ltd.

DISCLAIMERS

Proprietary Information

This document contains proprietary information of Hitachi-GE Nuclear Energy, Ltd. (Hitachi-GE), its suppliers and subcontractors. This document and the information it contains shall not, in whole or in part, be used for any purpose other than for the Generic Design Assessment (GDA) of Hitachi-GE's UK ABWR. This notice shall be included on any complete or partial reproduction of this document or the information it contains.

Copyright

Table of Contents

Executive Summary

This chapter describes how the GDA radiological protection safety case has taken the well proven Japanese ABWR design, assessed it within the UK regulatory context and identified further improvements that have been incorporated to develop the UK ABWR design.

It covers normal plant operation, i.e. start-up, power operation, shutdown and refuelling outages, and all relevant buildings and facilities on the UK ABWR site such as radioactive waste facilities, plus related aspects such as shielding and zoning. It also describes the measures in place to reduce exposure to radiation and contamination for workers during post-fault and severe accident recovery operations.

The chapter identifies the radiological hazards associated with normal operation of the UK ABWR and defines the radioactive sources that have been considered. It defines the strategy to ensure that the exposure to radiation is As Low As Reasonably Practicable (ALARP), and the protection measures that have been included in the design against direct radiation and radioactive contamination. This includes description of the radiation and contamination monitoring systems for occupational exposure.

The chapter presents the results of normal operation radiation dose assessments for the public (from direct radiation) and for workers (for both internal and external doses) and shows that these do not exceed regulatory dose limits and are ALARP. This information is used to demonstrate compliance of the UK ABWR generic design with the sections of the Nuclear Safety and Environmental Design Principles that are relevant to radiation protection.

A number of risk reduction measures have been introduced in response to safety assessments undertaken in GDA. They include a design change to adopt safe change HEPA filters in the Heating Ventilation and Air Conditioning system, and changes to the scheme for radiation and contamination zoning.

So, overall, the GDA assessments for radiation protection have resulted in improvements being incorporated into the UK ABWR design. This chapter describes how sources of radiation have been minimised, suitable protection has been developed, dose assessments have been undertaken and the overall result is a demonstration, at an appropriate level for GDA, that radiation doses to workers and to the public will be as low as reasonably practicable.

It should be noted that the detailed design of Structures, Systems and Components has not been completed during GDA. It is therefore acknowledged that further work will be required on radiological protection aspects of the safety case post-GDA to take account of detailed system design and site-specific aspects. This work will be the responsibility of any future licensee.

20.1 Introduction

This chapter of the PCSR summarises the radiological protection safety case for the UK ABWR. It identifies the radiological hazards associated with operation of the UK ABWR and the protection measures that have been included in the design. It demonstrates that radiation doses to workers and to the public comply with UK legal requirements and are As Low As Reasonably Practicable (ALARP).

20.1.1 Background

Fundamental to operation of a nuclear power plant is the fact that radiation is emitted and that workers and members of the public need to be appropriately protected from it.

Hitachi-GE has a long history of designing, manufacturing and supporting operations with over 20 nuclear power plants, starting with the original BWR in the 1960s, through the evolution of the ABWR and its further development over three generations of design. Radiation protection measures and arrangements have thus developed over a long period of time and ongoing improvements have led to reduction in doses incurred. The UK ABWR design is therefore one that is well proven from the perspective of radiation safety and radiological protection of workers and the public.

20.1.2 Document Structure

The following sections of PCSR Chapter 20 outline the radiation protection strategy which is being implemented for the UK ABWR.

Section 20.2 Purpose and Scope: This section sets out the purpose and scope, defines the main safety claims and where the evidence to these can be found. It identifies the aspects that are included within the scope of radiological protection safety.

Section 20.3 Definition of Radioactive Sources: The radioactive sources within the UK ABWR systems, which are at the origin of the exposure, are defined for radiological risk assessment. For normal operation, an overview of the UK ABWR design source terms and the source terms for radiation protection is presented in Section 20.3.

Section 20.4 Strategy to Ensure that Exposure is ALARP: Based on the radiological risk assessment results using the source terms, it is demonstrated that the exposure is ALARP. This strategy and methodology to ensure that worker and public doses are ALARP is presented in Section 20.4.

Section 20.5 Protection and Provisions against Direct Radiation and Contamination: To ensure that the exposure is ALARP, design features and administrative controls for protection against direct radiation and contamination control are installed in the UK ABWR. These are summarised in Section 20.5.

Section 20.6 Radiation and Contamination Monitoring of Occupational Exposure: One of the design features and controls is monitoring of exposure, which is presented in Section 20.6. This section addresses the monitoring systems for internal and external doses to workers as well as part of the monitoring systems for external dose to the public. The monitoring of internal dose to the public under normal operation is covered in the GEP (Generic Environmental Permit).

Section 20.7 Dose Assessment for the Public from Direct Radiation: Based on the strategy to ensure that the exposure is ALARP, public external dose from direct radiation including sky shine, which is

scattered radiation in the air, for the UK ABWR is evaluated. The assessment of internal doses to the public under normal operation is covered by the GEP.

Section 20.8 Worker Dose Assessment: Based on the strategy to ensure that the exposure is ALARP, the assessment of external and internal doses to on-site workers is carried out.

Section 20.9 Post Accident Accessibility: For fault and accident conditions, workers can be categorised as follows, workers mitigating fault / accident, e.g. workers in the MCR (Main Control Room), or other workers during fault / accident. In this section, dose assessment for the workers mitigating fault / accident, i.e. post-accident accessibility, are covered. Dose assessment for other workers and the public for design basis analysis, and beyond design basis analysis and severe accident analysis is presented in PCSR Chapter 24: Design Basis Analysis and 26: Beyond Design Basis and Severe Accident Analysis, respectively.

Section 20.10 Assumptions, Limits and Conditions for Operation: This section provides a summary of assumptions, limits and conditions for operation in relation to Radiation Protection.

Section 20.11 Summary of ALARP Justification: This section provides a summary of the ALARP justification that for Radiation Protection aspects of the UK ABWR.

Section 20.12 Conclusion: This section provides a summary of the main aspects of this chapter.

Section 20.13 References: This section lists the documents referenced within this chapter.

Other relevant information is captured in Appendices as follows:

Appendix A – Document Map for Supporting Evidence
Appendix B – Key Links with Other PCSR Chapters
Appendix C – Representative Safety Functional Claims in relation to Radiation Protection

This chapter is supported by a set of reference documents, primarily radiation protection Topic Reports, which describe where the arguments and evidence that substantiate safety claims are presented. The Topic Reports cover radiation zoning, shielding, worker dose evaluation, public dose evaluation, radiation and contamination monitoring etc. The full list is provided within the document map in Appendix A.

Appendix B shows relevant PCSR chapters for radiation protection safety case.

The following information is addressed in other chapters:

- Environmental and security aspects of the UK ABWR design (links to GEP and CSA documentation) are addressed in PCSR Chapter 1: Introduction.
- General requirements related to conventional safety aspects are described in PCSR Chapter 4: Safety Management throughout Plant Lifecycle.
- The general principles for the identification of Assumptions, Limits and Conditions for Operation (LCOs) within this chapter are described in Chapter 4.
- The categorisation of safety functions and safety classification of SSC in this chapter conform with the methodology described in Chapter 5: General Design Aspects. The general requirements for equipment qualification, Examination, Maintenance, Inspection and Testing (EMIT) and codes and standards that come from this safety categorisation and classification are also described in Chapter 5. Further details can be found in the EMIT section of the corresponding Basis of Safety Case document referred to for the section in PCSR.
- Source terms for other technical areas are presented below in Section 20.3.

- Assessment of internal doses to the public under normal operation is covered by the GEP.
- Assessment of external and internal doses to workers and the public for design basis analysis, beyond design basis analysis and severe accident analysis are covered by PCSR Chapters 24 and 26, respectively.
- Assessment of the required human actions and justifications of the underpinning assumptions regarding human capabilities and limitations related to dose and consequence assessments are covered by PCSR Chapter 27: Human Factors.
- Assessment of external and internal doses for workers and the public during decommissioning and for radioactive waste management and SFIS (Spent Fuel Interim Storage) are covered by PCSR Chapters 18: Radioactive Waste Management, 31: Decommissioning and 32: Spent Fuel Interim Storage.
- Emergency preparedness is covered by PCSR Chapter 22: Emergency Preparedness.
- Reactor water chemistry in relation to source terms is addressed in Chapter 23: Reactor Chemistry.
- General principles for operating procedures, maintenance and inspection programme are covered by PCSR Chapter 30: Operation.
- General requirements for decommissioning of the systems, structures and components within this chapter scope are described in Chapter 31.
- Environmental monitoring will be covered by future licensee at site specific stage.

20.2 Purpose and Scope

20.2.1 Purpose

The overall objective of this chapter is to provide a safety case that demonstrates that the exposure to ionising radiation for both workers and the public arising from the UK ABWR is as low as reasonably practicable and does not exceed regulatory dose limits.

Specific objectives of this chapter are to:

- Describe the structure of the radiation protection safety claims.
- Describe the detailed arguments and evidence that substantiate the safety claims or identify references to supporting documentation where this information can be found.
- Define the radioactive sources that have been considered.
- Define the strategy to ensure that the exposure is ALARP.
- Identify the protection and provisions against direct radiation and radioactive contamination and justify that these are adequate.
- Describe the radiation and contamination monitoring systems for occupational exposure and justify that these are adequate.
- Describe the dose assessment for members of the public from direct radiation and the internal and external dose assessment for workers, and show that these are as low as reasonably practicable and do not exceed regulatory dose limits.
- Describe the measures to reduce exposure to radiation and contamination for workers during post-fault and severe accident recovery operations (as well as dose uptake assessment to such workers).
- Identify links to relevant content of other GDA PCSR chapters, to ensure consistency across the whole safety case, and to ensure the overall safety case presented is complete.

The top claims for the radiation protection safety case are:

RP-C1: External and internal doses to workers are ALARP and meet the regulatory requirements during normal operation.

RP-C2: External doses to the public are ALARP and meet the regulatory requirements during normal operation.

RP-C3: External and internal doses to workers are ALARP and meet the regulatory requirements during design basis faults, beyond design basis faults and severe accidents.

RP-C4: External and internal doses to the public are ALARP and meet the regulatory requirements during design basis faults, beyond design basis faults and severe accidents.

Note: Internal dose to the public under normal operation is addressed in the GEP (Generic Environmental Permit). This links to RP-C2.

These top claims fall within the scope of several High Level Safety Functions (HLSFs), e.g. HLSFs in relation to Control of Reactivity and Confinement/Containment of Radioactive Materials (defined in PCSR Chapter 5: General Design Aspects, Section 5.6), and derive from the Hitachi-GE's Nuclear Safety and Environmental Design Principles (NSEDPs) in relation to Radiation Protection Principles to clearly demonstrate that doses to workers and the public for all conditions are ALARP for this chapter.

Appendix A shows relationship with each top claim and supporting documentation, i.e. PCSR and Topic Reports.

20.2.2 Scope

This chapter has a wide scope that incorporates all radiological activities within the UK ABWR plant and associated supporting facilities and related aspects such as shielding and zoning. This chapter presents an overview of the radiological hazards and associated control mechanisms for the UK ABWR.

This PCSR chapter describes the radiation protection safety measures that are included in the design of the UK ABWR. It covers normal operation, as well as accessibility to facilities following faults and accidents. All relevant buildings and facilities on the UK ABWR site are covered.

The scope of this chapter includes the following:

Radiological impact to the following groups:

- Onsite workers.
- Members of the public.

During:

- Normal Operation (start-up, power operation, shutdown and refuelling outages including maintenance), including:
  - Fuel handling for the complete fuel route from first delivery to site to placing in the spent fuel store (which is at concept level) including the transfer of materials across the site.
  - Handling of radioactive sources and waste.
  - Monitoring of occupational exposure.

In order to ensure that external and internal doses to workers and the public are ALARP and meet regulatory requirements during faults and accidents, the minimisation of radiation and contamination levels is achieved by applying radiation protection principles to equipment, systems, and layout. For faults and accident conditions, workers can be categorised as follows, workers mitigating the faults and accidents or other workers. This chapter covers the radiation protection measures and dose assessment for workers mitigating faults and accidents, i.e. post-accident accessibility.

20.3 Definition of Radioactive Sources

20.3.1 Introduction

During normal operation, workers are potentially exposed to radioactive substances within process systems and/or deposition on inner surfaces of the systems. This section describes the definition of radioactive sources for the UK ABWR during normal operation, and covers the various source terms present during normal operation.

With respect to Radiation Protection, these source terms are used as one of the design inputs for radiation shielding provisions, which are addressed in Section 20.5, as well as dose assessments, which are addressed in Sections 20.7 and 20.8. Source terms are also used to make radioactive waste and decommissioning assessments, which are addressed in PCSR Chapters 18: Radioactive Waste Management and 31: Decommissioning, respectively. Additionally, source terms are used to assess environmental discharges which are addressed in GEP Chapter 7: Quantification of Discharges and Limits [Ref-20.3-10].

20.3.2 Overview of UK ABWR Source Term

The source term for the UK ABWR is defined as the types, quantities, and physical and chemical forms of the radionuclides that have the potential to give rise to exposure to radiation, radioactive waste or discharges. The source term covers all aspects associated with the systems and processes within the UK ABWR that involve the production, transfer and accumulation of radioactivity. Within its assessment, parameters including generation mechanism, half-life, process accumulation and high level chemical speciation are evaluated.

20.3.2.1 Source Term Categories

There are four categories of UK ABWR source term, which are as follows:

- Primary Source Term (PST); defined as the level of radioactivity within the Reactor Pressure Vessel (RPV) in the UK ABWR. More specifically, the PST quantifies the concentration of each radionuclide present in the reactor water and reactor steam that leaves the RPV. The PST is the key to the UK ABWR source terms as it is an input to all other defined source terms.
- Process Source Term (PrST); defined as the level of radioactivity within each of the systems in the UK ABWR. The PrST quantifies the concentration of each radionuclide present within circuit pipes, ancillary equipment and plant systems. The PrST uses a mass balance approach to determine how radioactivity that exits the RPV changes due to processes such as decay, removal or accumulation.
- Deposit Source Term (DST); defined as the level of activity deposited within each of the systems in the UK ABWR. The DST quantifies the concentration of each deposited radionuclide on internal pipework, ancillary equipment, plant systems and fuel pins. The DST uses both the PST and PrST as inputs. The DST also quantifies the amount of activity in the fuel crud.
- End User Source Terms (EUST); defined as the final level of radioactivity considered for a particular assessment within a technical area of the safety and environmental case for the UK ABWR. The EUST is made up of relevant parts of the PST, PrST and DST.

Further information is addressed in [Ref-20.3-1].

20.3.2.2 Source Term Radionuclide Groups

Each source term is made up of the following three key radionuclide groups:

- Corrosion Product (CP); generated by the corrosion of materials used in the cooling circuits and ancillary plant of the UK ABWR. Stable CPs are deposited on the fuel cladding surface in the reactor core where they are exposed to a neutron flux, and become activated.
- Fission Product and Actinide Product (FP and ActP); released into the primary coolant by fission or activation of fissile materials, respectively. These can be released from fuel pins with small clad defects, tramp uranium and uranium deposits from previously failed fuel.
- Activation Product (AP); generated directly from activation of the reactor coolant or material entrained in the coolant as it repeatedly passes through the core.

Typically, each radionuclide within each of the three source term radionuclide groups is defined in terms of its soluble and insoluble concentrations as well as the total concentration, which is the summation of the soluble and insoluble concentrations.

Further information is addressed in [Ref-20.3-1].

20.3.2.3 Source Term Value Classifications

Additionally, there are three classifications of source term value for the UK ABWR which are as follows:

- Best Estimate (BE) values; which give an overall average of the source term expected in the UK ABWR over a defined period of time. This is a representative condition that is realistic and reasonable so as not to result in over-specification of plant systems. BE values can be used for areas such as Disposability Assessments and routine discharges.
- Design Basis (DB) values; which give a conservative maximum value for the source term which can be considered a bounding limit for the plant design (i.e. it is expected that this level would not be exceeded during operation, including for “expected events” which are expected to occur at least once during the lifetime of the plant (see PCSR Chapter 5: General Design Aspects, Section 5.5)). DB values are important for key safety related applications such as shielding calculations to ensure that doses to the workers and public are minimised.
- Cycle Average (CA) values; which give an “average” source term which defines the radioactivity over an entire fuel cycle (i.e. 18 months), including start-up, power operation, shutdown and refuelling outage modes. Both BE and DB CA values are defined, and include “expected events”.

BE and DB values are derived for each source term category (i.e. PST, PrST and DST). Additionally, two types of CA value are derived for the PST and PrST; these are CA (BE) values and CA (DB) values.

The application of these source term values to particular uses (such as shielding calculations or routine discharges) as part of demonstrating that the design of the generic UK ABWR reduces risk So Far As Is Reasonably Practicable (SFAIRP), were carefully considered and justified to demonstrate that they are appropriate and in line with relevant good practice.

Further information is addressed in [Ref-20.3-1].

20.3.2.4 Operating Modes Considered in the Source Term

During different operating modes, physical and chemical conditions within the reactor have a significant impact upon the source term. As such, the UK ABWR source term has been derived based on a consideration of all operating modes of the fuel cycle during normal operation. This includes all conditions different from fault and accident conditions.

Further information is addressed in [Ref-20.3-1].

20.3.3 Source Term Derivation Sequence

The UK ABWR source term has been developed in a sequential logical manner and follows the generation of radioactive material in the reactor core and its subsequent transport to and through downstream systems, accounting for decay, deposition, removal and accumulation processes within the plant. As outlined in Section 20.3.2.1, there are four categories of source term. These are sequentially derived and interrelated as follows.

20.3.3.1 Primary Source Term

The PST considers the initial formation of radionuclides generated within the core by fission and activation processes, and their subsequent entrainment within the flowing reactor water and main steam cooling fluids. Depending on generation mechanism, radionuclides are divided into the three source term radionuclide groups discussed in Section 20.3.2.2 (i.e. CP, FP/ActP and AP), and a source term is derived for each of the bounding operational modes discussed in Section 20.3.2.4. A BE value and DB value are determined for each radionuclide, each operational mode and for both reactor water and reactor steam. CA (BE) and CA (DB) values are also derived for each radionuclide and for both reactor water and reactor steam.

The derivation route differs for each group of radionuclides, and the concentration of radionuclides within the reactor water and reactor steam for each radionuclide category forms the input to the next stages of derivation namely the PrST, DST and EUST.

Further information is addressed in [Ref-20.3-2].

20.3.3.2 Process Source Term

The PrST quantifies the amount of radioactivity that is present in all systems that could contain radioactivity. As such, the PrST is split into systems and a separate PrST is derived for each system in the UK ABWR. As the systems represent process plant with well-defined design parameters, the derivation of the PrST is amenable to process modelling. As such, the PrST is primarily derived using a mass/activity balance calculation, using the PST radionuclide inventory as an input. This approach ensures that any conservatism or issues specifically addressed for the UK ABWR PST are consistently carried forward to the PrST in each plant system, rather than the use of a new OPEX data set, which may introduce separate conservatisms.

The systems in the UK ABWR are split into two categories: water systems and steam systems. A series of CA PSTs (both BE and DB values) are derived for each radionuclide group and in turn, for both reactor water and reactor steam. These CA values present an average activity observed over the course of a full operating cycle, and are one of the primary inputs into the mass/activity balance undertaken to derive the PrST.

While the majority of systems in the UK ABWR are amenable to modelling, the Condensate Storage Tank (CST) and Suppression Pool (S/P) are not because they receive many inputs. For these systems, the PrST is derived based on OPEX data.

Further information is addressed in [Ref-20.3-3].

20.3.3.3 Deposit Source Term

(1) Deposit Source Term on Surfaces of Various Systems

The DST quantifies the amount of radioactivity that becomes deposited on the surfaces of various systems that are exposed primarily to water phase conditions during normal operations and also under start-up and shutdown conditions. Deposited radioactivity that constitutes the DST is mainly composed of CP radionuclides; however, there is also a small contribution from FP and AP radionuclides. The DST is evaluated based on OPEX-based and/or the calculation methods. For the systems downstream of the reactor pressure vessel, where radionuclide concentrations are expected to be much lower, a more simple method based upon radionuclide concentration relative to the reactor water concentrations is applied.

(2) Fuel Crud Deposit Source Term

In addition to the deposited activity associated with each of the systems in the UK ABWR, the DST quantifies the amount of activity in the fuel crud. The fuel crud DST is derived directly from OPEX data from worldwide BWRs in the form of radionuclide deposits on fuel bundles. Due to the direct impact feedwater iron concentration and burnup have on the formation of fuel crud, OPEX data is corrected to the UK ABWR specification, so as to account for differences in feedwater iron concentration and burnup.

CA values are used in both assessments in order to reflect a deposit inventory associated with a single cycle.

Further information is addressed in [Ref-20.3-4].

20.3.4 Overview of Design Basis Source Term Values

The PST considers the initial formation of radionuclides generated within the core by fission and activation processes, and their subsequent entrainment within the flowing reactor water and main steam cooling fluids. Tables 20.3-1 and 20.3-2 provide an overview of the DB PST values for reactor water and reactor steam for both the power operation and shutdown modes. The radionuclides in the PST dataset are a compilation of those that are the most significant to each of the technical areas stated in Section 20.3.5. Important radionuclides for external dose, internal dose and radiation shielding design have been assessed for Radiation Protection. Important radionuclides for radioactive waste disposability have been assessed for Radioactive Waste and Decommissioning. For Environmental Discharges, important radionuclides for both normal operation and accident scenarios have been assessed.

Further information is addressed in [Ref-20.3-9].

Table 20.3-1: Overview of Design Basis Concentrations of Radionuclides in Reactor Water during Power Operation and Shutdown Modes

Nuclides	Activity (Bq/g) Design Basis		Nuclides	Activity (Bq/g) Design Basis	
	Power operation	Shutdown		Power operation	Shutdown
H-3	1.9E+03	1.9E+03	Y-91m	2.3E+02	2.3E+02
C-14	4.3E-04	4.3E-04	Zr-93	2.1E-05	1.0E-04
N-13	2.8E+04	2.8E+04	Zr-95	2.7E+02	2.9E+02
N-16	2.0E+06	2.0E+06	Nb-93m	1.6E+01	1.6E+01
F-18	7.4E+02	7.4E+02	Nb-94	2.4E-05	1.7E-03
Na-24	2.4E+02	2.4E+02	Nb-95	3.0E+02	3.3E+02
Cl-36	4.3E-06	4.3E-06	Mo-99	5.6E+02	7.9E+02
I-129	1.5E-06	1.2E-05	Tc-99	2.1E-04	5.2E-04
I-131	1.0E+03	1.4E+03	Sb-124	4.9E+00	1.2E+01
I-132	9.4E+02	1.3E+03	Sb-125	2.8E-01	8.5E-01
I-133	1.3E+03	2.1E+03	Cs-134	1.2E+01	1.7E+02
I-134	3.4E+03	3.8E+03	Cs-135	1.2E-05	9.0E-04
I-135	7.3E+02	1.4E+03	Cs-137	1.0E+01	7.2E+01
Cr-51	2.1E+02	4.5E+03	Cs-138	3.9E+02	6.3E+02
Mn-54	7.2E+01	1.6E+03	Ba-140	3.5E+02	3.5E+02
Mn-56	2.7E+02	1.9E+04	La-142	5.0E+02	5.0E+02
Fe-55	9.2E+01	6.4E+03	Ce-144	1.7E+02	1.7E+02
Fe-59	1.5E+01	3.1E+02	Np-239	1.1E+02	1.1E+02
Co-58	5.7E+01	9.7E+02	Pu-238	5.8E-05	5.8E-05
Co-60	4.4E+01	3.0E+03	Pu-239	7.4E-06	7.4E-06
Ni-59	1.2E-02	8.6E-01	Pu-240	1.2E-05	1.2E-05
Ni-63	1.9E+00	1.3E+02	Pu-241	3.2E-03	3.2E-03
Zn-65	2.0E+01	2.0E+03	Am-241	4.0E-06	4.0E-06
Sr-90	7.6E+00	7.6E+00	Cm-242	5.7E-03	5.7E-03
Sr-91	4.2E+02	4.2E+02	Cm-244	4.1E-05	4.1E-05
Sr-92	1.2E+03	1.2E+03			

Table 20.3-2: Overview of Design Basis Concentrations of Radionuclides in Reactor Steam during Power Operation and Shutdown Modes

Nuclides	Activity (Bq/g)	
	Design Basis	
	Power operation	Shutdown
H-3	1.9E+03	1.9E+03
C-14	2.2E-02	2.2E-02
N-13	5.6E+03	5.6E+03
N-16	2.4E+06	2.4E+06
F-18	7.4E+02	7.4E+02
Ar-41	8.8E-01	8.8E-01
Kr-85m	1.1E+01	6.7E+00
Kr-87	5.9E+01	1.2E+01
Kr-88	3.8E+01	1.7E+01
Kr-89	7.5E+02	2.2E+01
Kr-90	2.2E+03	2.3E+01
Xe-133	3.3E+01	3.2E+01
Xe-135	4.3E+01	3.1E+01
Xe-135m	8.3E+01	5.8E+00
Xe-138	1.2E+03	3.0E+01

20.3.5 End User Source Term

No further derivation is needed to develop the End User Source Term (EUST). Instead, the appropriate selection and combination of various component parts of the previously derived PST, PrST and DST collated for integrated plant systems are used to undertake further assessments associated with key technical areas within the safety and environmental case. Examples of the technical areas covered together with specific assessment areas are listed below.

Table 20.3-3: End User Assessments for each Technical Area

Technical Area	Reference
Radiation Protection	PCSR Chapter 20 [This Chapter]
Radioactive Waste Management	PCSR Chapter 18: Radioactive Waste Management
Decommissioning	PCSR Chapter 31: Decommissioning
Environmental Discharges	GEP Chapter 7: Quantification of Discharges and Limits [Ref-20.3-10]

Further information is addressed in [Ref-20.3-5].

The EUST for Radiation Protection (RP) is addressed in the next sections.

20.3.5.1 End User Source Term for Radiation Protection

The EUST for RP is a subset of the overall source term and is comprised of four separate datasets – one for each of the Radiation Protection end user assessments, which are as follows:

- Radiation shielding design
- Radiation and contamination zoning
- Worker dose assessment (external and internal doses)
- Public dose assessment from direct radiation (external dose)
  (Public dose assessment for internal dose is covered by GEP Chapter 8: Prospective Dose Modelling [Ref-20.3-11] and this source term is the EUST for environmental discharges.)

The EUST for RP is derived primarily from the PrST and DST radionuclide concentrations that are relevant to the piping and/or equipment locations of interest. For each assessment above, appropriate radionuclides and radioactive concentrations are selected based on the PrST and DST, e.g. conservative DB source terms for radiation shielding design.

Further information can be provided by [Ref-20.3-6] [Ref-20.3-7].

The following sections summarise the general considerations of the EUST for RP for each system.

20.3.5.1.1 Water Systems

(1) Reactor Water Clean-up System (CUW)

The CUW receives reactor water for treatment and return to the reactor. For radiation protection aspects, there is a rapid transit time of water from the reactor core, so that the dose from Nitrogen 16 (N-16) is important in the initial parts of the flow path. The reactor coolant is purified in the CUW filter demineraliser for removal of soluble and insoluble FP/CP/AP/ActP nuclides. This therefore means that another aspect in the CUW process source term is the accumulation of soluble and insoluble FP/CP/AP/ActP nuclides in the CUW filter demineraliser.

Further description of the CUW is provided in PCSR Chapter 12: Reactor Coolant Systems, Reactivity Control Systems and Associated Systems, Section 12.3.

(2) Condensate System

Condensate collects in the hotwell in the main condenser by condensation of the reactor steam. Non-condensable N-16 and Noble gas FPs remain in the condenser headspace and are removed by the Air Off-Take System, using Steam Jet Air Ejectors (SJAEs) and are treated in the Off-Gas System. There is partition of some N-16 into the condensate in the hotwell. However, due to the dwell time of the condensate in the hotwell, prior to its extraction by the Low Pressure Condensate Pump (LPCP), there is no N-16 in the condensate as it leaves the hotwell and enters Condensate Purification System (CPS). The rest of the N-16 enters the Off-Gas System.

Further description of the condensate system is provided in PCSR Chapter 17: Steam and Power Conversion Systems, Section 17.10.

(3) Condensate Purification System (CPS)

The CPS receives all of the condensate from the condenser hotwell as it is extracted by the Low Pressure Condensate Pump (LPCP). The main aspects are:

- Filtration of the condensate by Condensate Filters System (CF) primarily to remove particulate iron but also removing particulate CPs from the condensate.
- Demineralisation of the filtered condensate by Condensate Demineralisers System (CD). This is primarily for the removal of soluble contaminants but also to remove soluble FP/Act, CP, and AP from the condensate.

Further description of the CPS is provided in PCSR Chapter 17, Section 17.11.

(4) Condensate and Feedwater System (CFDW, outlet of the Condensate Filter and Demineraliser)

This contains single phase water at the outlet of the CPS prior to its entry to the feedwater heaters via the High Pressure Condensate Pump (HPCP). The feedwater at this section is purified in the CPS filter and CPS demineraliser for removal of soluble and insoluble FP/CP/AP/ActP nuclides.

Further description of the CFDW is provided in PCSR Chapter 17, Section 17.10.

(5) Feedwater System (FDW, after joining with the drain from the High Pressure Drain Tank in Turbine Building (T/B))

This is where there is a confluence of heated water from the outlet of the CPS and from the High Pressure Drain Tank (HPDT). The later represents the process source term in parts of the Heater Drains System. It is not necessary to reintroduce N-16 from the HPDT in this section since this N-16 has decayed prior to reaching this point in the FDW and its contributions are negligible.

Further description of the FDW is provided in PCSR Chapter 17, Section 17.10.

(6) Feedwater System (FDW in Reactor Building (R/B))

This is where there is a confluence of single phase heated water from the outlet of the final feedwater heater and a smaller amount of reactor water that has been treated in the CUW. The process source

term primarily reflects that of the heated condensate mixed with the drain water from the HPDT with an added contribution due to the inlet from the CUW.

Further description of the FDW is provided in PCSR Chapter 17, Section 17.10.

(7) Feedwater Heater Drains System (HD)

This contains condensate formed on the shell side of the feedwater heaters from Extraction Steam used for feedwater heating. Extraction Steam gives a process source term due to N-16 across the feedwater heaters and Moisture Separator Reheater (MSR) drain tanks, which decays as the drain water moves through the system. There is partition of some N-16 into the condensate in the drain water. Non-condensable N-16 and Noble gas FPs accompanying the Extraction Steam remain in the steam phase.

Further description of the HD is provided in PCSR Chapter 17, Section 17.7.

(8) Residual Heat Removal System (RHR)

The process source term for the RHR is established under operational condition of shutdown. The RHR removes decay heat from the reactor after shutdown. Therefore, the process source term of the RHR is set as the same as that of the reactor water during shutdown. Since the RHR operates several hours after actual shutdown, N-16 is ignored, but it includes the effects of the additional CP 'spike' in the RHR process source term.

Further description of the RHR is provided in PCSR Chapter 12, Section 12.3.

(9) Spent Fuel Storage Pool (SFP) and Fuel Pool Cooling and Clean-up System (FPC)

The SFP is on the operating deck of the reactor building. Spent fuel is stored in the grid fuel storage rack under water whose quality is controlled by the FPC removing impurities, including radioactive substances, in order to satisfy SFP water requirements. The SFP in the Reactor Building is isolated from the reactor water during normal operation and no cross contamination is expected. During refuelling outage, for the purpose of refuelling or maintenance, the SFP is connected to the reactor, Dryer and Separator Pit and Reactor well via the opened SFP gate; and water clean-up is conducted in conjunction with the CUW [Ref-20.3-8].

Further descriptions of the SFP are provided in PCSR Chapter 19: Fuel Storage and Handling, Section 19.9.

(10) Condensate Storage Tank (CST)

The CST stores water that has been treated in the Low Chemical Impurities Waste System (LCW) and is of sufficient quality for recycling or is replenished from the make-up water system. It provides condensate quality water for normal and fault conditions. The process source term for the CST is dictated by a range of plant variables and therefore, determined using Operational Experience (OPEX).

(11) Suppression Pool (S/P)

The S/P is located at the bottom of the Primary Containment Vessel (PCV) and manages steam/activity released in the case of a Loss of Coolant Accident (LOCA). Otherwise, the PrST reflects contamination by refuelling operations or testing of the Reactor Core Isolation Cooling

System (RCIC). The process source term for the S/P is based on OPEX data in separate results during reactor operation and in refuelling outages.

20.3.5.1.2 Steam Systems

(1) Main Steam System (MS)

Reactor steam flows from the outlet point around the RPV and then via the main steam line that passes through the Reinforced Concrete Containment Vessel (RCCV) and exits the R/B, then enters the T/B and High Pressure Turbine (HP-T). Some of the steam exits the HP-T to feed the Extraction Steam System. For radiation protection aspects, fast transit time of the steam results in a process source term that is dominated by N-16 in all parts of the MS, with any changes due to the coupled effects of radioactive decay and changes in specific volume.

Further description of the MS is provided in PCSR Chapter 17, Section 17.4.

(2) Extraction Steam System (ES)

The ES draws steam from the High Pressure Turbine (HP-T) and Low Pressure Turbines (LP-T) to supply heating steam to the Feedwater Heaters, the Moisture Separator Reheater (MSR) and to the Turbine Gland Steam System (TGS) evaporator. For radiation protection aspects, fast transit time results in a process source term due to N-16 in all parts of the ES, with any changes due to coupled effects of radioactive decay and changes in specific volume.

Further description of the ES is provided in PCSR Chapter 17, Section 17.5.

(3) Feedwater Heater Vent System (HV)

Extraction Steam is drawn from various points for feedwater heating, with some condensing and any excess being directed via the Feedwater Heater Vent system (HV) which is then directed to the main condenser. For radiation protection aspects, non-condensable N-16 gives a process source term due to N-16 across all the feedwater heaters and the MSR drain tanks, which takes into account radioactive decay.

Further description of the HV is provided in PCSR Chapter 17, Section 17.7.

(4) Reactor Core Isolation Cooling System (RCIC)

The RCIC uses a steam driven turbine pump that starts automatically to provide makeup water to the core if main feed is not available. The RCIC is used only during certain faults but is subject to regular testing or maintenance. Motive steam is drawn from the main steam lines and so carries a process source term due to N-16. The process source term takes account of decay and changes in specific volume along the steam path.

Further description of the RCIC is provided in PCSR Chapter 13: Engineered Safety Features, Section 13.4.

(5) Turbine Gland Steam System (TGS)

The TGS in the T/B supplies sealing steam to the turbine labyrinth packing parts to prevent turbine steam leaking to the air. The system centres on the Gland Steam Evaporator that uses auxiliary steam to generate the sealing steam from water drawn from the CST. This acts as a source of potential

activity in the sealing steam and to the Gland Steam Condenser, and condensate from this is returned to the main condenser and small amounts of non-volatiles via a filter to the main stack. The source term is dominated by CST water.

Further description of the TGS is provided in PCSR Chapter 17, Section 17.6 and Chapter 18, Section 18.7 (TGS filter).

20.3.5.1.3 Off-Gas Systems

The Steam Jet Air Ejectors (SJAEs) use Main Steam as a motive force to draw air and non-condensable gas from the main condenser. This gas mixture is fed forward to the Off-Gas System (OG). From the outlet of the main condenser to the inlet of the OG condenser, N-16 involved in a higher flow is important for radiation protection aspects in this section. From the outlet of the OG condenser to the inlet of the charcoal adsorber, Main Steam from the SJAEs is removed by the OG condenser, leaving a lower flow of residual air and non-condensable gases after the OG condenser. For radiation protection aspects, noble gas FPs are important in this section. For the charcoal adsorber, the accumulation of noble gas FPs and also of their daughters is important for radiation protection. For the path of the discharge from the charcoal adsorber to the main stack, noble gases are a key source for radiation protection.

Further descriptions of the OG are provided in PCSR Chapter 18, Section 18.7.

20.3.5.1.4 Heating Ventilating and Air Conditioning System

The Heating Ventilating and Air Conditioning System (HVAC) provides a cascade air flow from areas of low contamination to areas of higher contamination (supervised areas and controlled areas) and suitable environmental conditions (temperature, humidity and fresh air) for workers and equipment. The radioactive discharge via HVAC from each building is estimated by identifying the main radioactive sources in each plant area that contribute to potential airborne contamination by evaporation. The filtered air is then directed to the main exhaust stack.

Further description of the HVAC is provided in PCSR Chapter 16: Auxiliary Systems, Section 16.5.

20.3.5.1.5 Liquid Waste Management System

The Liquid Waste Management System (LWMS) consists of the subsystems such as the Low Chemical Impurities Waste System (LCW) and High Chemical Impurities Waste System (HCW). Source terms in the form of sludge and backwash water containing accumulated activity from filtration and demineralisation are taken into account as input source term. For radiation protection, the key source terms are corrosion products in these systems.

Further description of the LWMS is provided in PCSR Chapter 18, Section 18.5.

20.3.5.1.6 Solid Waste Management System

Treatment media from the CUW demineraliser filter, the condensate filter and demineraliser, the FPC filter demineraliser and the treatment media in the LWMS are directed to the Solid Waste Management System (SWMS), together with some operational / maintenance waste. For radiation protection aspects, key source terms are corrosion products in this system.

Further description of the SWMS is provided in PCSR Chapter 18, Sections 18.6, 18.10, 18.11 and 18.12.

20.3.5.1.7 Deposition

According to the OPEX data, Co-60 (Cobalt 60) is the dominant isotope in the deposit source term from the aspect of radiation protection [Ref-20.3-4].

20.4 Strategy to Ensure that the Exposure is ALARP

20.4.1 Introduction

This section describes the strategy to ensure that the following exposures during start-up, power operation, shutdown and refuelling outages in normal operation are ALARP in the GDA phase:

1. External and internal doses to the employees with ionising radiation
2. External dose to the other employees on the site and the public
   (GEP Chapter 8: Prospective Dose Modelling covers internal dose to the public.)

A summary of the strategy is shown below:

- Selection of the reference plant as a starting point for the UK ABWR dose assessment
- Consideration of design criteria and good practice for the UK ABWR dose assessment
- Implementation of the reasonably-practicable dose reduction measures identified taking into account good practice
- Demonstration of ALARP using the design criteria

The ALARP review for worker and public doses has been carried out based on the strategy presented in this section. The outcomes of the review for both workers and the public are addressed in Sections 20.8 and 20.7, respectively.

For fault and accident conditions, PCSR Chapters 24: Design Basis Analysis and 26: Beyond Design Basis and Severe Accident Analysis cover external and internal doses to workers and the public during design basis faults, beyond design basis faults and severe accidents, respectively.

Consideration of risks being ALARP during decommissioning is covered in PCSR Chapter 31: Decommissioning.

Finally, all relevant risks including radiological and other risks from all sources, such as risk in relation to conventional safety, are required to be shown to be ALARP. This overall risk assessment is presented in PCSR Chapter 28: ALARP Evaluation.

20.4.2 Radiation Protection Safety Requirements

The management of radiation protection in the UK is governed by legislation (including regulations), principles and criteria. The legislative requirements are listed in Table 20.4-1.

Table 20.4-1: Legislative Requirements

Recommendations / Legislation		Effective dose limits	
International Recommendations	ICRP 2007 (Publication 103) [Ref-20.4-1]	Workers	100mSv over 5years and Max 50mSv in any given year
		Public	1mSv/y
European Recommendations	Council Directive 2013/59/Euratom [Ref-20.4-2]	Workers	100mSv over 5years and Max 50mSv in any given year
		Public	1mSv/y
UK Legislation	The Ionising Radiations Regulations 1999 (IRR99) [Ref-20.4-3]	Workers	20mSv/y (individual) 500mSv/y (extremities and skin) 150mSv/y (lens of eye)
		Public	1mSv/y (from all sources on a site) 50mSv/y (extremities and skin) 15mSv/y (lens of eye)

The International Commission on Radiological Protection (ICRP) draws its recommendations from the work of various scientific authorities who study the effects of ionising radiation on the human body.

The member states of the European Union are bound by the EURATOM Treaty, from which international recommendations are transferred into Directives published in the Official Journal of the European Union.

The UK Ionising Radiations Regulations (IRR) aim at ensuring that exposure to ionising radiation from work activities is kept As Low As Reasonably Practicable (ALARP) and does not exceed the specified dose limits. The IRR stipulate that a radiation employer should take all necessary measures to restrict So Far As Is Reasonably Practicable (SFAIRP) the extent to which its employees and other persons are exposed to ionising radiation. They also specify legal limits for the annual exposure of workers and public, that are, respectively, 20 mSv/y and 1 mSv/y (from all sources). Additional limits are specified for equivalent doses to the eye lens, the skin, the hands, forearms, feet and ankles.

The framework underpinning all of the standards and criteria above are the ICRP principles of radiation protection, namely, justification, optimisation and limitation.

- Exposures to ionising radiation should be optimised. Radiation exposures must be restricted SFAIRP under IRR 1999, that is, doses should be ALARP.
- Exposures to ionising radiation should be limited in that they must not exceed the statutory dose limits in IRR 1999.
- Exposures to ionising radiation should be justified.

In the context of new nuclear power plants, this duty generally requires that all measures are taken by the employer (and so by the designers and operators) to minimise radiation doses to workers and members of the public providing that the time, trouble and cost of implementing such measures are not grossly disproportionate compared with the benefits achieved. In addition, where legislation gives prescriptive requirements these must also be met.

The three main principles of justification (exposure to radiation must be justified from an economic and social standpoint), optimisation (application of the As Low As Reasonably Achievable principle) and limitation (the sum of worker doses cannot exceed the limits set by regulations) will be applied in accordance with the requirements of ICRP103 [Ref-20.4-1].

The UK Health and Safety Executive (HSE) has developed a suite of guidance documents consisting of six parts [Ref-20.4-4], explaining the concept "reasonably practicable" and providing guidance about what they should expect to see in duty holders demonstrations that the risk has been reduced 'as low as reasonably practicable' (ALARP).

With respect to radiation protection, operators must demonstrate that radiation doses (all risks) to workers and members of the public from nuclear facilities are ALARP. In addition, the provisions adopted to keep exposures ALARP are also demonstrated from the aspect of hierarchy of control, e.g. that engineering means are used, and other options are only used when those means are not possible or cost-effective. Personal protective equipment should only be used if no other means are reasonably practicable.

The regulation of radiation protection in the UK is governed by the Ionising Radiations Regulations 1999 (IRR99) [Ref-20.4-3] and the Approved Code of Practice [Ref-20.4-5]. The Environment Agency also has an interest in doses to members of the public.

The Office for Nuclear Regulation (ONR) Safety Assessment Principles (SAPs) [Ref-20.4-6] assign levels and objectives for radiation doses to individuals and groups; these are the Basic Safety Levels (BSLs) and the Basic Safety Objectives (BSOs), respectively. These encompass the legal limits defined in the Ionising Radiation Regulations. The employer (and so the designers and operators) must ensure that doses are ALARP in any case. The SAPs condition RP.7 directs that the duty-holder should establish a hierarchy of control measures to optimise protection in be provided in those parts of the facility to which access needs to be gained, which clearly links to IRR99 Reg8(2).

For the UK ABWR, the UK ABWR Nuclear Safety and Environmental Design Principles (NSEDPs) document [Ref-20.4-7] has been developed based on the relevant UK legislation and regulatory guidance. The specific UK ABWR individual dose criteria addressed in the NSEDPs are presented in the table below.

Table 20.4-2: Radiation Safety Criteria

Description	Annual dose (mSv)	
	BSL	BSO
Employees working with ionising radiation	20 (LL*)	1
Other employees on the site	2	0.1
Average to a group of employees working with ionising radiation	10	0.5
Any persons off the site from sources of ionising radiation on the site	1 (LL*)	0.02

*: LL – Legal Limit defined in Ionising Radiations Regulations, 1999

In terms of workers, there are two categories of worker on site who could potentially be exposed, firstly those directly exposed by working in designated areas, (employees working with ionising radiation) and secondly, those exposed indirectly by virtue of being present on site but not directly working in designated areas (other employees on the site).

An important element of optimisation of protection is that the collective dose to individuals due to the operation of the nuclear facility on and off site must be kept ALARP.

The radiological protection engineering procedures require that the component design engineer considers the applicable guidelines of the IAEA [Ref-20.4-8], ICRP [Ref-20.4-1] and NEA [Ref-20.4-9].

The design of the UK ABWR has adopted the design considerations described in the principles above to implement ALARP.

Further information is addressed in [Ref-20.4-10].

20.4.3 Strategy to Ensure that Worker Dose is ALARP

The ABWR combines advanced facility design features and administrative procedures designed to keep the occupational radiation exposure to personnel ALARP. During the design phase, system design, layout, shielding, ventilation, monitoring instrument and other equipment designs are integrated with traffic, security and access control. Data from operating plants are continuously integrated during the design phase.

This section focuses on the strategy for employees who are working directly with ionising radiation and for other employees on the site. It should be noted that direct radiation only is considered for other employees on the site.

Further information is addressed in [Ref-20.4-10].

20.4.3.1 Employees Working with Ionising Radiation

Hitachi-GE has developed a robust process, through the GDA ALARP Methodology [Ref-20.4-11], which ensures that legal duties to reduce risks SFAIRP are met. The GDA ALARP Methodology is primarily aimed at demonstrating that a particular aspect of the UK ABWR design or a specific part of its operation, has risks which are, or are capable of being reduced ALARP. In this methodology document, the justification process is further expanded to provide a framework that enables Hitachi-GE to demonstrate that the overall UK ABWR plant design is ALARP.

From a radiation protection point of view, the methodology to ensure that the exposure is ALARP is based on the GDA ALARP Methodology. The steps followed in the ALARP methodology are outlined below:

(1) Reference ABWR Plant: This is the starting point for risk considerations.
(2) Design Criteria and Good Practice: A UK regulatory expectation is that relevant good practices should be included in the design (if they are not already present) in order to provide a ‘base case’ design for the ALARP assessment. Mitigation Options (MOs), which are generic design features and administrative controls in relation to protection against direct radiation and contamination control, are developed taking into account international good practice. Design dose criteria are set for ALARP assessment.
(3) Implementation: Application of reasonably practicable MOs.
(4) Demonstration of ALARP: Systematic consideration of additional risk reduction measures which terminates when no further reasonably practicable measures to reduce risk are available.

Each step is addressed in the following sections.

(1) Reference ABWR Plant

A specific plant design is selected as a reference design for the UK ABWR. In respect of UK ABWR worker dose, the ABWR with the longest operational experience is selected as the reference plant because radioactive depositions on the inner surfaces of equipment and piping, which contribute to worker exposure, generally increase with operation time. However, dose levels reach equilibrium

after approximately 5 years operation because a key source term is Co-60 (cobalt 60) with a half-life of about 5-years. Kashiwazaki Kariwa units 6 and 7 (KK-6 and KK-7) have the longest operational experience of any ABWR, and hence the largest accumulation of depositions. KK-7 was therefore selected as the reference plant for the UK ABWR worker dose assessment.

(2) Design Criteria and Good Practice

For the UK ABWR, the radiation protection design principles and objectives have been derived from a number of sources such as the UK regulations and regulatory guidance. These high level principles and objectives have been incorporated into Hitachi-GE UK ABWR NSEDPs [Ref-20.4-7], which set down the basis for nuclear safety, radiological safety and environmental protection from the designer's perspective.

A significant exercise was performed to capture UK good practice for the control of contamination, which in itself also reflects common international good practice. The exercise resulted in the production of a document [Ref-20.4-12], which provides an input into the selection of design criteria, which were then translated into the Mitigation Options (MOs), i.e. generic design features and administrative controls in relation to contamination control. For the protection against direct radiation, the MOs were extended to cover relevant good practice.

The MOs have been identified based on the hierarchy of controls, i.e. ERIC-PD (Eliminate, Reduce, Isolate, Control, Personal protective equipment and Discipline) methodology. These include UK and international good practice. Examples of MOs are outlined below.

(a) Elimination

As a first step, elimination options are considered. To eliminate worker dose, i.e. 'zero' exposure, two options are considered, source elimination or exposure time elimination. If the radioactive sources are completely eliminated, there is no potential for exposure. If the exposure time is eliminated by fully automatic systems and/or maintenance free (no maintenance) systems, there is also no potential for exposure.

(b) Reduction

If source or exposure time elimination is not feasible or reasonably practicable, reduction options by design features are considered as a next step. To reduce worker dose, several options are considered and examples are shown below:

(i) Source reduction
To reduce the radioactive sources, i.e. reduction of radioactive depositions on inner surface of equipment and piping, the following measures are considered:

- Reactor water chemistry control, material selection and surface finishes
  Deposition on the inner surface of systems can potentially be reduced by altering reactor water chemistry control, material selection, and/or surface finishes.

- Decontamination and flushing
  Deposition on the inner surface of systems can be reduced by decontamination and flushing.

(ii) Zoning
To avoid the excessive exposure to workers within the buildings, appropriate radiation and

contamination zoning is set for all areas taking into account worker activities and radiation / contamination levels.

(iii) System design
The system is designed to minimise contamination and direct radiation.

(iv) Containment
Appropriate containment is an important aspect for reducing potential worker internal dose.

(v) Ventilation
Ventilation plays an important role in preventing leakage from systems and containments as well as minimising radioactive airborne contamination in the work area. Specific measures include:

- Cascade ventilation (air flow) from potential lower contamination area to higher contamination area with sufficient number of air changes
- Air-tightness between different contamination zones

(vi) Space and distance
To reduce exposure time, sufficient working space is required because if working space is not sufficient, working time, i.e. exposure time, becomes longer. Also, if reasonably practicable, the distance between the source of radioactivity and the working space is increased, e.g. by having a separated maintenance space in a low dose area.

(vii) Painting and coating
Painting and/or coating surfaces to facilitate decontamination.

(viii) Access control by engineered measures
To avoid excessive exposure by unauthorised entry, appropriate access control is designed.

(ix) Drain
To avoid accumulation of radioactive depositions on inner surfaces of equipment and piping, appropriate gradient and drain systems are designed.

(x) Exposure time reduction
The use of automated devices, maintenance reduction (fewer parts and/or extended periodicity) leads to a reduction in exposure time. In terms of maintenance frequency, Reliability Centred Maintenance (RCM) (a method of optimising maintenance to avoid excessive maintenance, which could otherwise result in unnecessary additional dose) will be applied.

(xi) Shielding
Appropriate radiation shielding is one of the key radiation protection measures.

(c) Isolation

After consideration of radiation and contamination reduction options, the ‘isolation’ options are then assessed. Aspects of isolation include segregation of higher radiation and/or contamination areas from lower radiation and/or contamination areas.

(d) Control

If the design features are not reasonably practicable, then administrative controls are considered. To control worker dose, several options are considered and examples are shown below:

(i) Temporary and mobile units
Temporary and mobile units to minimise direct radiation and contamination, such as temporary shielding and mobile exhaust unit, are used for further dose reduction.

(ii) Monitoring and alarm
Worker dose is managed by monitoring radiation and contamination levels and alarming appropriately in order to avoid excessive dose.

(e) PPE (Personal Protective Equipment)

Appropriate PPE including RPE (respiratory protective equipment) is also considered.

(f) Discipline

As final options, the discipline options, which depend on the human reliability rather than other options, are considered. The examples are shown below:

(i) Training
Appropriate training programme leads to reduction in worker exposure.

(ii) Warning by administrative controls
Use of warning notices to raise workers' awareness and prevent or avoid excessive exposure.

To ensure that the design reduces doses to levels that are ALARP and represents good practice, dose criteria for design are set for the individual dose and collective dose to workers and for the individual dose to those members of the public who receives the greatest doses.

Available OPEX data from international BWRs and Japanese BWRs/ABWRs were reviewed to find the plant with the lowest dose. The lowest dose data were used as a baseline to determine the UK ABWR collective dose target and individual dose constraint to workers. These dose levels were used to support the demonstration of ALARP and will ensure that the UK ABWR is designed to achieve a level of safety that is at least consistent with the best operating stations.

Data has been reviewed using the Information System on Occupational Exposure (ISOE) annual reports [Ref-20.4-13], the United States Nuclear Regulatory Commission (U.S. NRC) annual reports [Ref-20.4-14] and the annual reports on the Operational Status of Nuclear Facilities in Japan, as published by the Japan Nuclear Energy Safety organisation (JNES) [Ref-20.4-15].

From all the available data sets some were deemed more representative than others; these were data from Japanese BWR and ABWR, US BWR and Swedish BWR, and these were examined more closely. With their water chemistry, the US BWRs are more in-line with the UK ABWR, although the latter will be the first plant to employ hydrogen water chemistry from an early stage in the plant life cycle. The Swedish plants were found to have a good dose record, and the Japanese BWRs and ABWRs data share a similar background and technology.

In terms of the collective dose target, the available OPEX data shows that the best collective dose of

the BWRs (Swedish BWR) in the world is estimated to be about 0.6 person-Sv and the collective dose of the KK-7 (Japanese ABWR) is estimated to be about 0.6 person-Sv. Another relevant operating collective dose target is the value of 0.5 person-Sv per year per unit contained within the European Utility Requirements (EUR) for LWR (Light Water Reactor) Nuclear Power Plants [Ref-20.4-16] which is a wider European requirement for future licensee. Therefore, the collective dose target for the UK ABWR is 0.5 person-Sv per year per unit, averaged over 10 years.

For the individual dose constraint, the EUR for LWR Nuclear Power Plants [Ref-20.4-16] specifies a dose target for individual effective dose of 5 mSv per year. Based on a review of UK nuclear reactor sites, it is common practice to adopt an annual dose constraint of 10 mSv. This represents an upper limit or maximum individual dose above which doses are deemed to be unacceptable. Ideally, determining an individual dose constraint for a new nuclear facility should follow the same process as that described for the collective dose target. The existing OPEX data for US and Japanese plants show that the maximum individual dose is about 10 mSv. Swedish BWR data indicate a maximum individual dose above 10 mSv. Therefore, the individual dose constraint for the UK ABWR is 10 mSv per year.

(3) Implementation

The MOs have identified the generic design features and administrative controls in relation to contamination control and protection against direct radiation. The list of MOs has been developed and structured in accordance with the ERIC-PD methodology. The ERIC-PD based structure and ranking aid the optioneering and studies carried out in support of design reviews and implementation of the MOs, which includes all relevant good practices.

Following implementation of the MOs and design modifications, the UK ABWR risk level expressed in terms of annual collective dose and maximum annual individual dose are estimated using the conversion factors, which are determined based on design modifications in relation to radiation and contamination from the KK-7 to the UK ABWR.

(4) Demonstration of ALARP

The UK ABWR is shown to meet design principles and requirements, and the plant specific annual collective dose and maximum individual dose are compared to the collective dose target and individual dose constraint as part of the ALARP demonstration process. It should be recognised that these target and constraint are not limits. They are useful design tools in the optimisation process. However, provided that any excess can be justified, they may be exceeded. Also, achieving a design target does not, in itself, demonstrate that a design is ALARP. Doses should be reduced below target values if reasonably practicable options to do so are available, i.e. if the time, trouble, cost etc. are not grossly disproportionate to the reduction in risk achievable.

To aid the demonstration of ALARP within GDA, a design study was carried out using a number of representative worker activities. The criteria for the selection of those activities are based on:

- Activities with the highest collective dose; when combined these will contribute to about half of the total collective dose;
- Activities with the highest surface and airborne contamination hazard.

These activities are shown below. Total collective dose of these activities accounts for approximately 50 percent of total collective dose of all worker activities.

1. Reactor Opening/Closing Series Work
2. In-service Inspection (ISI) Preparations/Work in the Drywell
3. RHR Pump Inspection and Maintenance
4. Reactor Well Decontamination
5. FMCRD Replacement/Overhaul
6. RIP Overhaul
7. CUW Heat Exchanger Inspection and Maintenance
8. CUW Pump Inspection and Maintenance

The design study has the following objectives:

- Demonstrate the implementation of MOs for the relevant tasks;
- Comparisons against design targets / constraints; and
- Carry out a systematic review to look for any additional dose reduction measures that can be implemented.

The search of additional risk reduction measures are carried out in an iterative process until the radiological risk is ALARP, i.e. when it is demonstrated that further improvements in dose reduction are grossly disproportionate. Further information is addressed in [Ref-20.4-10].

20.4.3.2 Other Employees on the Site

For the ALARP demonstration methodology for the other employees on the site, i.e. the employees outside of the buildings, the fundamental approach is similar to the public dose ALARP demonstration addressed in Section 20.4.4 below.

The main differences from the public dose evaluation are:

- Distance from the sources (public: the order of hundred metres / other employees on the site: the order of ten metres)
- Occupancy pattern (public: 8760 hours / other employees on the site: 2000 hours)

Further information is addressed in [Ref-20.4-10].

(1) Reference ABWR Plant

Similar to the public dose evaluation (see Section 20.4.4 below), KK-7 is also selected as a reference design as a starting point for the UK ABWR dose evaluation for the other employees on the site.

(2) Design Criteria and Good Practice

For the UK ABWR, the radiation protection design principles and objectives have been derived from a number of sources such as the UK regulations and regulatory guidance. The UK ABWR NSEDPs [Ref-20.4-7] have been developed as addressed in Section 20.4.3.1.

As addressed in Section 20.4.3.1, the exercise was performed to capture UK and international good practice for contamination control. This has produced a document [Ref-20.4-12], which provided an input into the selection of design criteria, which were then translated into the MOs. For the protection against direct radiation, the MOs were extended to cover the relevant good practice. Some of these MOs can be applied to the other employee dose case.

To ensure that the design reduces doses to levels that are ALARP and represents good practice, the

design target is set for the individual dose to the other employees on the site. The UK ABWR individual dose constraint for the other employees on the site is set to be 100 μSv which is the BSO addressed in the NSEDPs [Ref-20.4-7].

(3) Implementation

The MOs are implemented to minimise the dose to other employees on the site from direct radiation. The reasonably practicable options are selected taking into account relevant good practices.

(4) Demonstration of ALARP

The UK ABWR calculated dose and the individual dose constraint are compared. Calculated doses should be reduced below design target values if reasonably practicable options to do so are available, i.e. if the time, trouble, cost, etc. are not grossly disproportionate to the reduction in risk achievable. The search for additional risk reduction measures is carried out in an iterative process until the radiological risk is ALARP, i.e. when it is demonstrated that no further improvements in dose reduction are reasonably practicable.

20.4.4 Strategy to Ensure that Public Dose is ALARP

This section focuses on the strategy for the public from direct radiation. Internal dose to the public is addressed in the GEP documents.

Further information is addressed in [Ref-20.4-10].

For the public dose ALARP demonstration methodology, the fundamental approach is similar to the worker dose ALARP demonstration addressed in Section 20.4.3.

(1) Reference ABWR Plant

A similar approach was used to the selection of the reference design for the UK ABWR worker dose assessment, as addressed in Section 20.4.3.1, is applied to select the reference design for the UK ABWR public dose assessment.

The reference design, which is a starting point for the UK ABWR public dose assessment, is determined based on the OPEX information of all ABWR plants for which there is operational experience. The off-site dose OPEX measured at monitoring posts positioned around the site boundary are within the uncertainty range of the natural background radiation for all ABWR sites from which OPEX has been gathered.

As mentioned in Section 20.4.3.1, radioactive depositions on the inner surfaces of equipment and piping increase with operational time, and dose levels reach equilibrium approximately after 5-year operation. Therefore, KK-7 is selected as the reference design for the UK ABWR public dose assessment.

An initial evaluation was carried out based on the reference design and the design modifications from the reference design such as:

- Location of radioactive sources (distance to the site boundary)
- Source terms
- Different and/or additional requirements from the reference design in relation to civil structure, in particular the outer walls and ceilings (e.g. a difference of seismic design

consideration)

(2) Design Criteria and Good Practice

For the UK ABWR, the radiation protection design principles and objectives have been derived from a number of sources such as the UK regulations and regulatory guidance. The UK ABWR NSEDPs [Ref-20.4-7] have been developed as addressed in Section 20.4.3.1.

As addressed in Section 20.4.3.1, the exercise was performed to capture UK and international good practice for contamination control. This has produced a document [Ref-20.4-12], which provided an input into the selection of design criteria, which were then translated into the MOs. For the protection against direct radiation, the MOs were extended to cover the relevant good practice. Some of these MOs can be applied to the public dose case.

To ensure that the design reduces doses to levels that are ALARP and also represents good practice, a design target is set for the individual dose to the public. The UK ABWR individual dose constraint for the public is set to be 20 µSv which is the BSO addressed in the NSEDPs [Ref-20.4-7]. It is noted that this dose is exposure from all pathways, i.e. it includes external and internal doses.

(3) Implementation

The MOs are implemented to minimise the public dose from direct radiation. The reasonably practicable options are selected taking into account relevant good practices.

(4) Demonstration of ALARP

The UK ABWR calculated dose and the individual dose constraint are compared. Calculated doses should be reduced below the constraint if reasonably practicable options to do so are available, i.e. if the time, trouble, cost, etc. are not grossly disproportionate to the reduction in risk achievable. The search for additional risk reduction measures is carried out in an iterative process until the radiological risk is ALARP, i.e. when it is demonstrated that no further improvements in dose reduction are reasonably practicable.

20.5 Protection and Provisions against Direct Radiation and Contamination

20.5.1 Introduction

This section describes design features and administrative controls for protection against direct radiation and contamination control for the UK ABWR.

To determine the specific design and control to minimise direct radiation and contamination for specific equipment and piping, generic design features and administrative controls for protection against direct radiation and contamination control, which are defined as the Mitigation Options. 'MOs', are identified and listed based on the hierarchy of controls, i.e. ERIC-PD (Eliminate, Reduce, Isolate, Control, Personal protective equipment and Discipline) methodology. Examples of the MOs are shown in Section 20.4.3.1. These MOs are implemented into the identified radiological risks.

This section summarises the specific MOs (design features and administrative controls) that minimise direct radiation and contamination for specific radioactive components such as equipment and piping. The relevant SSCs (Structures, Systems and Components) and the SFCs (Safety Functional Claims) for radiation protection are covered in other chapters from system, mechanical and/or civil engineering perspective. The representative SFCs in relation to radiation protection are summarised in Appendix C.

20.5.2 Radiation Protection General Design Considerations

Radiation protection general design considerations are summarised here. Further information is provided in [Ref-20.5-1].

20.5.2.1 Equipment General Design Considerations for ALARP Exposures

20.5.2.1.1 Equipment Design Considerations to Limit Time Spent in Radiation Areas

The equipment design factors which are relevant to the time spent in radiation areas include the following:

(1) Equipment is designed to be operated and have its instrumentation and controls in accessible areas.
(2) Equipment is designed to facilitate maintenance.
(3) Past operational experience has been factored into current designs.
(4) Life expectancy of equipment and minimising the requirement for replacement are considered.
(5) Components or equipment can be easily removed for maintenance in low dose rate areas.

20.5.2.1.2 Equipment Design Considerations to Limit Radiation and Contamination Levels of Components

The equipment design aspects which are relevant to component radiation levels include the following:

(1) Equipment designs include provisions for limiting leaks of fluid from within vessels or piping and subsequent radioactive contamination of adjacent areas from these fluids.

(2) The materials including surface finishes are selected to reduce the radiation level.
(3) The systems including the filter and demineraliser are designed to limit the radioactive isotopes in the coolant.
(4) Piping and components are designed to avoid contamination traps and dead legs; components are designed to drain from the lowest point, where reasonably practicable.
(5) Components are designed to be flushable, drainable and/or capable of being isolated, where reasonably practicable.

20.5.2.2 Facility Layout General Design Considerations for ALARP Exposures

20.5.2.2.1 Minimising Working Time Spent in Radiation Areas

General design considerations for the facility to minimise the amount of time spent in radiation areas by the workers include the following:

(1) Locating equipment, instruments, and sampling stations, which require routine maintenance, calibration, operation, or inspection, for ease of access and minimum required occupancy time in radiation areas.
(2) Laying out plant areas to allow remote or mechanical operation, service, monitoring, or inspection of highly radioactive equipment.
(3) Providing appropriate means, where practicable, for transportation of equipment or components to lower radiation areas for maintenance. Such lower radiation areas may include appropriate decontamination facilities.
(4) Providing sufficient space, adequate lighting and services to facilitate easy maintenance of equipment.

20.5.2.2.2 Minimising Radiation Levels in Plant Access Areas and Vicinity of Equipment

Generally, design considerations that are directed toward minimising radiation levels in plant access areas and in the vicinity of equipment requiring worker attention include the following:

(1) Separating radiation sources and occupied areas wherever practicable.
(2) Providing adequate shielding between radiation sources and access and service areas.
(3) Locating equipment, instruments, and sampling sites in the lowest practicable radiation zone.
(4) Providing central control panels to permit remote operation of all essential instrumentation and controls from the lowest radiation zone practicable.
(5) Separating highly radioactive equipment from less radioactive equipment, instruments and controls, wherever practicable.
(6) Providing means and adequate space for utilising and storing moveable shielding for sources within the service area when required.
(7) Providing space for pumps and valves maintenance outside of highly radioactive areas where possible.
(8) Providing back-flushable filter systems for highly radioactive radwaste and cleanup systems.
(9) Providing labyrinth entrances or shielding doors to radioactive pump, equipment, and valve rooms.
(10) Providing adequate space in labyrinth entrances for easy access.
(11) Providing optimal reactor water chemistry control to reduce radioactivity in reactor water and deposition balanced with avoidance of material degradation (SCC).

20.5.2.2.3 Minimising Contamination Levels in Plant Access Areas

General design considerations are directed toward minimising contamination levels in plant access areas and in the vicinity of equipment requiring worker attention include the following:

(1) Providing means to avoid and control contamination and to facilitate decontamination of potentially contaminated areas where practicable, for example: use of smooth surfaces; non-porous coatings on surfaces; sealing of joints; provision of sticky mats and sub-change facilities.
(2) Providing means for decontamination of service areas.
(3) Maintaining ventilation airflow patterns from areas of lower to higher contamination.
(4) Ventilation extract points located in the vicinity or sources of airborne contamination.
(5) Installed or mobile contamination monitoring equipment.

20.5.2.3 Operational Considerations for ALARP Exposures

Described below are several general considerations for ALARP exposures.

(1) Permanent shielding is used, where possible, with workers behind walls or in low-level radiation areas when not actively working in high radiation areas. Temporary shielding is used in some areas only if the total exposure, which includes the exposure received during its installation and removal due to the present of the temporary shielding, will be effectively reduced.
(2) Systems and equipment which are subject to crud buildup have been equipped with connections which can be used for flushing the system to eliminate potential hot-spot build-up if it could not be avoided by design.
(3) Prior to performing maintenance work, consideration will be given to flushing and/or chemical decontamination of the system or piece of equipment in order to reduce the crud levels and hence the worker's exposure.
(4) Access control points will be established in low-level radiation areas because workers may spend a significant amount of time in these areas changing protective clothing and respiratory equipment. These access points are set up to limit the spread of contamination to as small an area as possible.
(5) Contamination containments, i.e. glove bags, poly bottles, tents, etc., are used where practicable to allow workers to work on highly contaminated equipment while minimising the spread of contamination during the work.
(6) Utilising safe change systems for removal and replacement of filter units.
(7) Workers will be assigned active alarming dosimeters to allow the control of accumulated dose at any time during the work.
(8) Operational procedures will support the overall effort to keep occupational exposures ALARP.
(9) Appropriate Personal Protective Equipment (PPE) / Respiratory Protective Equipment (RPE) are adopted.
(10) Administrative controls for access and prevention of the spread of contamination by the use of sub-change areas, barriers, etc.

20.5.3 Radiation Protection Design Features

Radiation protection design features are summarised here. Further information is provided in [Ref-20.5-1].

20.5.3.1 Equipment Design

This section describes several specific components, as well as system design features that support keeping the exposure of plant workers during plant operation and maintenance ALARP.

(1) Pumps
- Pumps located in radiation areas are designed to minimise the time required for maintenance.
- Provisions are made for flushing and in certain cases chemically cleaning pumps prior to maintenance.
- Where two or more pumps conveying highly radioactive fluids are required for operational reasons to be located adjacent to each other, shielding is provided between the pumps to maintain exposure levels ALARP.
- Pumps adjacent to other highly radioactive equipment are also shielded to reduce the maintenance exposure.
- Systems containing radioactive fluids are welded wherever possible to reduce leakage through flanged or screwed connections.

(2) Heat Exchangers
- The tubes of heat exchangers are constructed to minimise the possibility of failure and reduce maintenance requirements.

(3) Valves
- Wherever possible, valves in systems containing radioactive fluids are separated from those for “clean” services to reduce the radiation exposure from adjacent valves and piping during maintenance.
- Flushing and drain provisions are deployed in radioactive systems to reduce exposure to workers during maintenance, where reasonably practicable.
- Valves are designed to minimise leakage through gaskets.
- Valves are designed to be easy to inspect and maintain, with lifting points provided where necessary.

(4) Piping
- Piping is selected to provide a service life equivalent to the design life of the plant, with consideration given to corrosion allowances and environmental conditions.
- Piping containing radioactive fluids is designed to minimise the leakage through the piping or flanged connections.
- Where reasonably practicable, the annular regions between pipe and penetration sleeves are filled with shielding material to reduce the streaming area presented by these penetrations.
- Penetrations through walls between different contamination zoning classifications are sealed to prevent miscellaneous leaks into the environment.
- A scheme to uniquely identify all process plant, piping, and valves will be drawn up. All items will be readily identifiable on the plant and referenced on the piping and instrumentation diagrams. In addition, permanent labelling of key items of equipment will be put in place. Formal, simple, easily visible and unambiguous labelling will be provided wherever mistakes in identification could occur and could result in significant radiological consequences to operators.

(5) Ventilation
- Heating Ventilating and Air Conditioning Systems (HVAC) are designed to limit the extent of airborne contamination by providing airflow patterns from areas of low contamination to

more contaminated areas, maintaining pressure differentials and providing adequate air change rates within rooms, and location of extract points.

- HVAC extracted air is filtered before discharge to the atmosphere.
- Safe-change High Efficiency Particulate Air Filters (HEPAs) are designed to be easy to remove and contain with minimum operator exposure.

(6) Lighting

- Lighting is designed to provide sufficient illumination in radiation areas to allow quick and efficient surveillance and maintenance operations.
- Emergency lighting enables workers in the plant to leave quickly from the radiation controlled area in emergency situations and to avoid unforeseen radiation exposure.

20.5.3.2 Layout Design

This section describes several features of equipment layout and design which are employed to maintain worker exposures ALARP.

(1) Penetrations

- Penetrations through shielding walls are avoided whenever possible to reduce the number of streaming paths provided by these penetrations. Whenever penetrations are required through shielding walls, however, they are located to minimise the impact on surrounding areas.
- Penetrations are located so that the radiation source cannot "see" through the penetration. When this is not possible or to provide an added order of reduction, penetrations are located to exit far above floor level in open corridors or in other relatively inaccessible areas.
- Penetrations which are offset through a shielding wall are employed to reduce the streaming of radiation through these penetrations, where reasonably practicable.
- Annular gap of penetrations is backfilled for radiation shielding, where reasonably practicable.

(2) Instrumentation

- Instruments are located in low radiation areas such as corridors or control rooms, whenever possible.
- Remote reading of instruments is utilised where reasonably practicable, if readings cannot be taken in low radiation areas.

(3) Sample Stations

- Sample stations are located in low radiation areas to reduce the exposure to workers operating this equipment.
- Flushing provisions are included and pipe drains to plant sumps are provided to minimise the possibility of spills.
- Fume hoods are employed for airborne contamination control.

(4) Ventilation

- Major HVAC equipment, blowers and coolers etc., are located in low radiation areas to minimise exposures to workers maintaining this equipment.
- The HVAC ducting penetrations through walls of shielded enclosures are located to minimise radiation levels through to adjoining areas.
- Local extract ventilation is employed to control exposures by removing contaminants entrained in the air local to workfaces and thereby reduce potential airborne activity and internal exposures.

(5) Piping

- Piping containing radioactive fluids is routed through shielded pipe runs and shielded equipment enclosures whenever possible. Embedded piping in concrete walls and slabs is acceptable when it is shown that there are no reasonably practicable alternatives which reduce risk i.e. the risk is ALARP with leakage control being considered appropriately.
- Accessibility requirements for maintenance and repair have to be considered when deciding piping layout.
- Radioactive services are routed separately from piping containing non-radioactive fluids, whenever possible, to minimise the exposure to workers during maintenance.
- Penetrations for piping through shielding walls are designed to minimise the impact on surrounding areas. Approaches used to accomplish this objective are described in (1) above in this section.
- Piping configurations are designed to minimise the number of "dead legs" and low points in piping runs to avoid accumulation of radioactive crud and fluids in the line, i.e. adequate pipe gradients. Drains and flushing provisions are employed whenever feasible to reduce the impact of required "dead legs" and low points.
- Provisions are also made in radioactive systems for flushing with condensate or chemically cleaning the piping to reduce crud build-up, whenever reasonably practicable.
- The configuration of piping in the environment of pumps is such as to provide sufficient space for efficient pump maintenance.

(6) Equipment

- Equipment layout is designed to reduce the exposure of workers required to inspect or maintain equipment.
- "Clean" pieces of equipment are located separately from those which are sources of radiation whenever possible to avoid cross-contamination and unnecessary exposure during maintenance and inspection activities.
- For systems that have components that are major sources of radiation, piping and pumps are located in separate enclosures to reduce exposure from these components during maintenance.

(7) Floor Drains

- For systems containing highly radioactive fluids, drains are hard piped directly to equipment drain sumps, rather than allowing contaminated fluid to flow across the floor to a floor drain.
- Appropriately sloped floor drains are provided in shielded enclosures and other areas where the potential for a spill exists to limit the extent of contamination.
- For the spillage of radioactive materials onto the floor or wall, the application of appropriate coatings onto the concrete surfaces that may be potentially contaminated is considered so that decontamination may be carried out more easily and attract a lower potential dose and contamination.
- Bunds, which are the physical boundaries that prevent contamination spread on floors that may be potentially contaminated, are also provided.

(8) Changing Rooms, Changing Areas and Related Facilities

- Within the controlled area, changing areas are provided at selected places to prevent the spread of contamination during maintenance and normal operation. The facilities included in these areas correspond to the requirements for access to the potentially more contaminated of the two areas and on the anticipated contamination levels.
- Where justified by the possible levels of air contamination, consideration is given to the provision of permanent changing areas with decontamination facilities for personnel,

monitoring instruments and storage areas for PPE/RPE.

- Within the changing room, a physical barrier is provided to separate clearly the clean area from the potentially contaminated area. The changing rooms are large enough to meet the needs during periods of maintenance work, and allowance is made for temporary personnel.
- The main change room utilises area monitoring to ensure any changes in area conditions are detected. Regular radiological surveys of the main change room are carried out.

(9) Lighting

- Consideration is given to locating lighting fixtures in easily accessible locations, thus reducing the exposure time for bulb replacement.

20.5.3.3 System Design

This section provides several design considerations in regard to radioactive systems for maintaining workers' radiation exposures ALARP for the following locations/systems.

20.5.3.3.1 Reactor Building

(1) Reactor Water Clean-Up System (CUW)

- The CUW is designed to remove impurities continuously by using filter demineralisers to reduce the presence of radioactive substances in the reactor water and thereby reduce the buildup of radioactivity in the primary circuit (including radionuclide deposition) and thus lead to lower operator dose uptake.
- Each of the two filter demineralisers is located in a separate concrete-shielded enclosure to minimise radiation levels in the local area.
- The filter demineralisers are designed to be backwashed and precoated to replace spent resins.
- Most of the valves and piping are located in a shielded valve gallery outside the filter demineraliser enclosures.

Detailed information on the CUW can be found in PCSR Chapter 12: Reactor Coolant Systems, Reactivity Control Systems and Associated Systems, Section 12.3.

(2) Residual Heat Removal System (RHR) [Shut-down Cooling Mode]

- The RHR is designed to be used in the Shut-down Cooling Mode during system startup, normal hot stand-by and system shutdown to recirculate reactor water and remove reactor decay heat.
- The heat exchangers and associated pumps are located in separate concrete-shielded enclosures for each division.
- The enclosures are accessible through labyrinths which reduce radiation levels outside the enclosure to acceptable levels.

Detailed information on the RHR can be found in PCSR Chapter 12, Section 12.3.

(3) Fuel Pool Cooling and Cleanup System (FPC)

- The FPC is designed to remove the decay heat from the spent fuel stored in the Spent Fuel Pool (SFP). The FPC is also designed to remove impurities including radioactive substances from the pool to minimise the release of radioactivity to the environs. Miscellaneous impurities contained in the pool water are continuously demineralised and removed through the ion exchange resins in the demineraliser units.
- The FPC demineraliser units are each located in a concrete-shielded enclosure to minimise

radiation levels in the local area.
- The FPC demineralisers are designed to be backwashed and precoated to replace spent resins.
- The FPC pumps are located in a low radiation area adjacent to the shielded backwash tank.

Detailed information on the FPC can be found in PCSR Chapter 19: Fuel Storage and Handling, Section 19.9.

(4) Main Steam System (MS)
- Leakage from the Main Steam Isolation Valves (MSIVs) to surrounding areas is minimised by providing valve drains piped to the Low Chemical Impurities Waste System (LCW) or Suppression Pool (S/P).
- Penetrations through the steam tunnel walls are minimised to reduce the streaming paths made available by these penetrations.

Detailed information on the MS can be found in PCSR Chapter 17: Steam and Power Conversion Systems, Section 17.4.

20.5.3.3.2 Turbine Building

Off-Gas System (OG)
- The OG is designed to treat off-gas from the condenser via the Steam Jet Air Ejectors (SJAE) by facilitating recombination of oxygen and hydrogen; discharge delay to allow radioactive decay of xenon and krypton also hold up radioactive iodine.
- The main equipment and piping in the OG are enclosed by a shielding wall, taking into account the high radioactivity in the OG.

Detailed information on the OG can be found in PCSR Chapter 18: Radioactive Waste Management, Section 18.7.

In addition, for the turbine building, actual dose rates in many areas are less than 0.001mSv/h during refuelling outages and radiation exposure for workers is very low.

Moreover, radiation dose rates in the areas of the turbine building where access is required are very low during plant operation because of significant shielding provisions around the equipment and piping containing radioactive substances. In addition, unauthorised entry into the high dose areas is limited by appropriate access control measures which will be designed to avoid unexpected worker dose.

20.5.3.3.3 Liquid and Solid Radioactive Waste Management System

Liquid Radioactive Waste Management System (LWMS) and Solid Radioactive Waste Management System (SWMS)
- The main equipment and piping in this system are enclosed by a shield wall due to the high levels of radioactivity within this system.
- The enclosures are accessible through labyrinths which reduce radiation levels outside the enclosure to acceptable levels.
- This system includes engineered flushing points to allow the plant to be flushed clean prior to maintenance work.
- Access to the enclosures is controlled through the application of appropriate physical and management barriers.

Detailed information on the LWMS and SWMS can be found in PCSR Chapter 18.

20.5.3.4 Ventilation

HVAC systems for the various buildings in the Nuclear Power Plant (NPP) are discussed in PCSR Chapter 16: Auxiliary System, Section 16.5. It includes the design basis, system descriptions, and evaluations with regard to the heating, cooling, and ventilating capabilities of the systems as well as the radiation control aspects of HVAC.

(1) Design Objective

The HVAC is designed to keep airborne radiation exposures to plant personnel and releases to the environment ALARP. One of the HVAC functions is to keep negative pressure within an area so that contaminants are not spread and to provide for dilution of contaminants when they are generated by ensuring sufficient ventilation rate. In addition, the exhaust air from contaminated areas is passed through filters to reduce radioactive discharge from the stack. For more detail, see PCSR Chapter 16, Section 16.5.

(2) Design Description

Air flow direction within the building is directed from less contaminated areas to more highly contaminated areas thus preventing the spread of contamination to other areas. The design of the HVAC system ensures that the resultant pressure differential across the active areas produces an overall net negativity of the air pressure with regard to external areas. This prevents airborne contamination spread outside of the active areas and supports the overall contamination control ethos.

The radiation level of the air stream is monitored at the final outlet duct of the reactor building (R/B) controlled area and the HVAC is automatically isolated upon detecting high levels. Radiation levels are monitored at the main stack (process monitoring system - see PCSR Chapter 14: Control and Instrumentation) and manually surveyed in the building atmosphere in order to manage normal operational risks in accordance with the ALARP principle.

20.5.3.5 Reactor Water Chemistry

To minimise radiation levels, minimisation of radioactive sources is achieved by optimising reactor water control, e.g. via depleted zinc oxide (DZO) injection. This is described in greater detail in PCSR Chapter 23: Reactor Chemistry.

20.5.3.6 Material Selection including Surface Finishes

Material selection of systems and components, including surface finishes, exposed to reactor coolant has been considered in the design to maintain radiation exposure ALARP. This means that the materials and surface finishes are selected to minimise activated corrosion products which are the primary sources of radiation during maintenance after shutdown. For example, radiation exposure potential has been reduced appreciably through the removal or reduction of cobalt from components as compared to early BWR fleet. Further information on this aspect is found in PCSR Chapter 23, Section 23.4.

20.5.3.7 Transport and Storage of Radioactive and/or Contaminated Items

One of the key provisions against direct radiation and contamination control during transport and storage of radioactive and/or contaminated items is the use of appropriate transfer containers that provide suitable levels of containment to prevent contamination spread and provide sufficient shielding to minimise direct radiation.

The fuel handling machine (FHM) is used for the transport and storage of spent fuel within the R/B, when nuclear fuel is exchanged or reshuffled after reactor shut-down in order to minimise radiation exposure to workers. This FHM is automatically controlled by a process computer to cover areas of the reactor well and the SFP including the cask pit. Furthermore, the refuelling operation can be done from a remote control room.

In addition, the spent fuel is transported to the SFP from the reactor core under water while keeping adequate water depth to minimise radiation exposures to workers by an appropriate interlock systems. Further information on design for fuel storage and handling is addressed in PCSR Chapter 19.

Spent fuel and high level waste (HLW) is transported from the SFP to outside of the R/B and then into storage using appropriate casks which provide adequate radiation shielding and containment. This is considered in more detail in PCSR Chapters 32: Spent Fuel Interim Storage and 18. The radioactive waste management including intermediate level waste (ILW) and low level waste (LLW) is addressed in Chapter 18.

20.5.3.8 Radiation and Contamination Monitoring

Radiation and contamination monitoring contributes to the minimisation of worker doses. This is addressed in Section 20.6.

20.5.3.9 Designation of Areas

Particular areas within the UK ABWR are appropriately designated as supervised and controlled areas based on potential radiological risks. These area designations are input information and/or support the design features and administrative controls in relation to protection against direct radiation and contamination control. This section summarises the UK ABWR radiation and contamination zoning. Further information is provided in [Ref-20.5-2].

20.5.3.9.1 UK Safety Requirements relating to Area Designation

The Ionising Radiations Regulations 1999 (IRR99) [Ref-20.5-3] and associated Approved Code of Practice and guidance (ACoP) [Ref-20.5-4] determine when radiological 'Controlled' and 'Supervised' Areas are required. These two areas are defined as:

(1) Supervised Area

An employer shall designate as a Supervised Area any area under his control, not being an area designated as a Controlled Area.

A Supervised Area shall be designated when:

- It is necessary to keep conditions under review to determine whether the area needs to be a Controlled Area, or
- Any person, having regard to the time that could reasonably be spent in any part of that Area, is likely to receive an effective dose greater than 1mSv a year or greater than 1/10 of any relevant dose limit.

In addition, Reg 29(1) lists shielding as one of the characteristics of a suitable source store. The shielding is designed to achieve outside the store the lowest dose rate that is reasonably practicable. Where non-classified persons may approach the outside of the store it is advisable that the dose rate does not normally exceed 2.5 µSv per hour and may need to be lower in special cases if the radiation employer wishes to avoid designating the area as a Supervised Area.

(2) Controlled Area

A Controlled Area shall be designated when:

- It is necessary for any person who enters or works in the area to follow special procedures designed to restrict significant exposure to ionising radiation in that area or prevent or limit the probability and magnitude of radiation accidents or their effects; or
- Any person working in the area is likely to receive an effective dose greater than 6 mSv a year or an equivalent dose greater than three-tenths of any relevant dose limit.

20.5.3.9.2 Radiation and Contamination Zoning in UK ABWR

Where appropriate, areas are further divided into zones depending on levels of radiation, contamination and airborne activity in the zones. This is outlined below.

(1) Radiation Zoning

Radiation areas are designated on the actual or potential dose rate during normal operation. Table 20.5-1 summarises the designation of areas for radiation in the UK ABWR. It is based on the radiation area designation currently used in the UK; the criteria are based on Radiological Safety Rules currently in use and contain common definitions used throughout UK power stations.

Table 20.5-1: Designation of Areas for Radiation in the UK ABWR

Area Designation	Dose Rate (μSv/h)	Notes
Un-designated Area: R0	Less than 2.5	An area not designated under the IRR99. Annual dose received less than 1mSv.
Supervised Area: R1	2.5 or more to less than 7.5	An area where conditions shall be kept under regular review. Annual dose received likely to be greater than 1mSv but less than 6mSv.
Radiation Controlled Area: R2	7.5 or more to less than 50	Having regard to the time that could reasonably be spent in any part of the area persons are unlikely to exceed a dose of 1mSv in a calendar month or where any person, having regard to the time that could reasonably be spent in any part of that area is likely to receive a dose greater than 6mSv in a calendar year.
Radiation Controlled Area: R3	50 or more to less than 500	Having regard to the time that could reasonably be spent in any part of the area, persons are unlikely to exceed a dose of 1mSv in a week.
Radiation Controlled Area: R4	500 or more	An area where the radiation dose rate is such that the maximum doses specified for a Radiation Controlled Area R3 would be likely to be exceeded or which is subject to high dose rates (permanent, temporary or transient).

(2) Contamination Zoning

Contamination controlled areas are defined on the potential for surface contamination and airborne contamination. Table 20.5-2 describes arrangements of area designation for contamination in the UK ABWR. It is established based on the area designations that are currently in use and are typical of the UK power industry.

Table 20.5-2: Designation of Areas for Contamination in the UK ABWR

Area Designation	Criteria	Notes
Un-designated Area: C0	An area not designated under the IRR 99.	Radioactive content of any item shall meet the requirements of EPR 16 Schedule 23, Part 6*.
Supervised Area: C1	An area where conditions shall be kept under regular review.	Less than C2 limits
Controlled Area	Radionuclide	Radioactivity Lower Limit
Contamination Controlled Area: C2 (surface activity)	Alpha emitters	0.4 Bq/cm^2
	Radionuclides not otherwise specified (including tritium)	4 Bq/cm^2
	^{55}Fe, ^{59}Ni, ^{63}Ni, ^{99}Tc, ^{125}Sb or ^{144}Ce (low energy beta emitters)	40 Bq/cm^2
Contamination Controlled Area: C3 (airborne activity)	Where Alpha emitting radio-nuclides may be disregarded.	Alpha Limit - not applicable
		Beta Limit - 10 Bq/ m^3
	Where Alpha and Beta emitting radio-nuclides are present.	Alpha Limit - 0.01 Bq/m^3
		Beta Limit - 2 Bq/m^3
	Where Tritium is present, and Alpha and Beta emitting radio-nuclides may be disregarded.	Alpha Limit - not applicable
		Beta Limit - 1 x 10^4 Bq/m^3
Contamination Controlled Area: C4	> x100 lower C3 level	-

*: The Environmental Permitting (England and Wales) Regulations 2016 [Ref-20.5-5]

20.5.3.10 Radiation Shielding

Restricting exposure by engineered means is an important safety principle. Control of radiation exposure in the UK is mandated by the Ionising Radiations Regulations (IRR99). Regulation 8(2) of IRR99 establishes a hierarchy of control measures which must be implemented. In addition, Regulation 10 of IRR99 requires adequate maintenance and testing engineered controls etc. and personal protective equipment. First and foremost employers must ensure that radiation doses are adequately restricted by engineered materials. Optimisation of protection and minimisation of doses received in a nuclear facility is an essential element of the overall demonstration of the ALARP principle of a plant design. For protection against direct radiation, one of the engineered features is radiation shielding.

This section summarises the UK ABWR radiation shielding. Further information can be provided in [Ref-20.5-6].

20.5.3.10.1 Main Radiation Shielding

The main radiation shielding features for the UK ABWR are shown below.

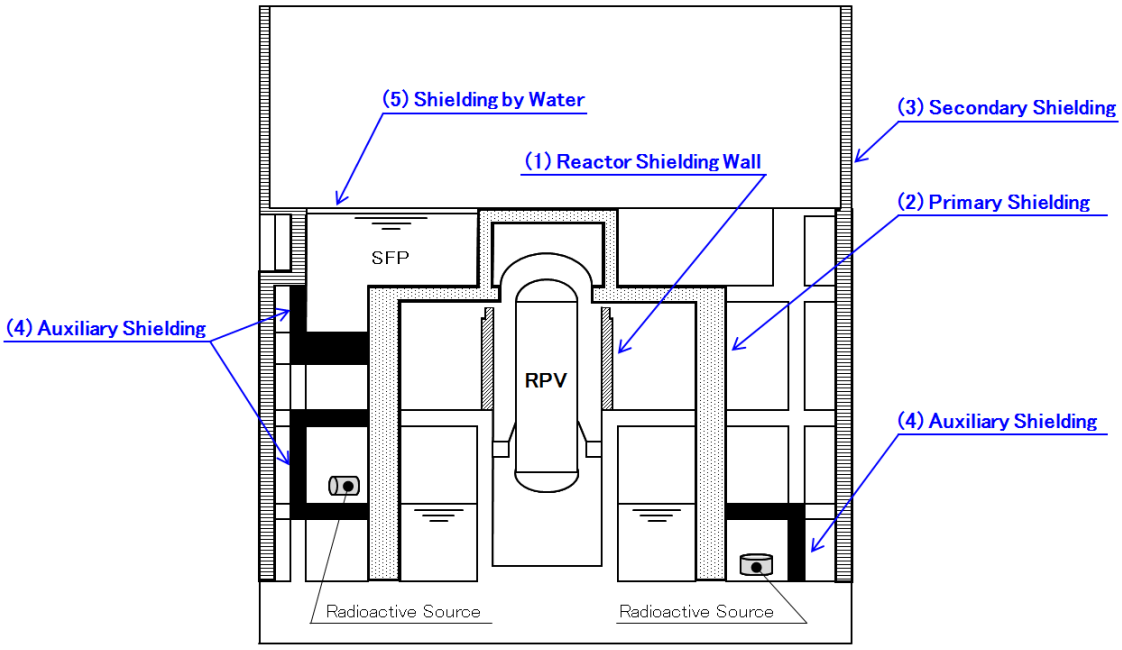

Figure 20.5-1: Main Radiation Shielding

(1) Reactor Shielding Wall (Wall around RPV)

The reactor shielding wall attenuates neutron and gamma radiation emitted from the reactor core. This shielding wall links to PCSR Chapter 10: Civil Works and Structures, Section 10.4.

(2) Primary Shielding (Reinforced Concrete Containment Vessel or Primary Containment)

The primary shielding is a structure that encloses the primary containment vessel and attenuates neutron and gamma radiation emitted from the reactor core. This shielding links to PCSR Chapter 10, Section 10.4. The design description of the primary containment is addressed in PCSR Chapter 13: Engineered Safety Features, Section 13.3.

(3) Secondary Shielding (Secondary Containment)

The secondary shielding is a concrete wall that encloses the boundary of the secondary containment vessel. This shielding, in combination with the primary shielding, attenuates neutron and gamma radiation emitted from the reactor core. Secondary shielding is designed to ensure that the dose rates outside of it satisfy the criteria for a non-designated area (i.e. radiation zone of R0). This shielding links to PCSR Chapter 10, Section 10.4. The design description of the secondary containment is addressed in PCSR Chapter 13, Section 13.3.

(4) Auxiliary Shielding

Auxiliary shielding consists of the shielding structures, in all relevant buildings, that enclose components such as equipment and piping containing radioactive substances. This shielding attenuates the gamma radiation emitted from radioactive sources in these components. In addition, auxiliary shielding is installed to satisfy the dose rates of radiation zones in surrounding areas. The radiation shielding for radioactive components within the reactor building as well as turbine building, radwaste building, control building, service building, etc., are identified as auxiliary shielding. This shielding links to PCSR Chapter 10, Section 10.4.

(5) Shielding by Water

Shielding by water is considered during spent fuel transport from the reactor core to the SFP, and during spent fuel storage in the SFP. This shielding links to PCSR Chapter 19, Section 19.8.

20.5.3.10.2 Radiation Shielding Calculations

To determine appropriate radiation shielding thickness, dose rates at the 'cold' side, which is a lower radiation zone side, are calculated. The calculated dose rates are compared with radiation zoning criteria at the cold side. The shielding thickness is determined to meet the radiation zoning criteria and ALARP. It is noted that shielding is optimised to reduce exposure ALARP as well as the radiological zoning manages the residual risk, i.e. radiological zoning (radiological risk in area) is also reduced ALARP. These calculations are carried out the following assumptions.

(1) Radioactive Sources

The shielding provisions are derived for normal operation source terms in most cases. In several cases, such as shielding assessment for post-accident accessibility, fault condition source terms are implemented. Post-accident accessibility is discussed in Section 20.9. For normal operation, the Design Basis values of the End User Source Terms (EUST) for radiation protection, described in Section 20.3, and the reactor core, described in PCSR Chapter 11: Reactor Core, are used in radiation shielding calculations.

(2) Modelling

The geometry and layout of components are considered in the calculation modelling. The models adopted to represent radioactive sources and associated equipment and shielding are such as to ensure conservative calculation results.

In general, cylindrically-shaped equipment such as tanks, heat exchangers and demineralisers are modelled as right circular cylinders. Equipment internals are sectionally homogenised to incorporate density variations where applicable.

Complex piping runs are conservatively modelled as truncated cylindrical sources spaced along the piping run. In the calculations, no shielding benefit is claimed from thin support structures (e.g. corrugated plate): this is judged to be conservative.

(3) Radiation Zoning

All systems containing radioactivity are shielded based on the access requirements and radiation exposure level limits for surrounding areas. The shielding thickness is determined to both satisfy the radiation zoning criteria and to be ALARP.

(4) Shielding Materials

The primary materials used for shielding are ordinary concrete, steels and water. For the UK ABWR the material definitions are generally based on UK industry standard material definitions (e.g. ordinary concrete at a density of 2.3 g cm^{-3} etc.).

(5) Computer Codes

MCNP5, which is a three dimensional general Monte Carlo N-Particle transport code for gamma rays and neutrons (including scatter), has been used in all shielding calculations. The verification and validation of this code were carried out and further justification by comparisons using alternative codes (MCBEND, which is a Monte Carlo Program for General Radiation Transport Solutions, or RANKERN, which is a Point-Kernel Program for Gamma-Ray Transport Solutions) has been performed.

20.5.3.10.3 Radiation Shielding for Employees working within Buildings

Workers within the buildings containing radioactive materials are protected from direct radiation by sufficient radiation shielding in order to ensure that dose is ALARP. Such shielding may be categorised as follows:

(1) Radiation Shielding Calculations around the Reactor Core

The thickness and penetration / opening provisions of the reactor shielding wall, primary shielding and secondary shielding are determined based on neutron and gamma ray radiations emitted from within the reactor core (and secondary radiation emitted following neutron interactions with structural materials).

(2) Radiation Shielding Calculations around Radioactive Components

Auxiliary shielding consists of shielding structures, in all relevant buildings, that enclose components such as equipment and piping containing radioactive materials (including shielding walls around maintenance rooms where radioactive equipment may be transported). Such shielding is determined based on gamma ray exposure from activation products (especially N-16 (Nitrogen 16)), fission products and corrosion products.

(3) Radiation Shielding Calculations around the SFP

Spent fuel and radioactive materials are transferred and/or stored within the SFP. To reduce worker dose from these radioactive materials, radiation shielding is provided by water. The required shielding thickness (i.e. water level) is determined from gamma radiation from fission products, corrosion products and actinides.

20.5.3.10.4 Radiation Shielding for Persons outside Buildings

Workers on site and outside buildings containing radioactive materials together with the public (off site) are protected from direct radiation by providing sufficient radiation shielding so that dose levels from the radioactive materials are ALARP.

Radiation shielding for these workers and the public is primarily provided by the outer walls and roofs of buildings. In determining the dose under normal operation, the effects of radiation scattering from adjacent surfaces and skyshine (air scatter) are taken into account.

20.6 Radiation and Contamination Monitoring of Occupational Exposure

20.6.1 Introduction

20.6.1.1 Objective

This section describes radiation monitoring of occupational exposure. Radiation monitoring provides significant information in order to ensure the protection of people from the harmful effects of ionising radiation and confirm the safety of radiation sources. The entire radiation monitoring system is the responsibility of the future licensee who is also responsible for developing a radiation monitoring programme (or a radiation protection programme).

In this section, Hitachi-GE describes the essential and necessary design for both direct radiation and radioactive contamination monitoring of occupational exposure as part of the generic design of the UK ABWR. In addition, radiation monitoring for the measurement of public exposure is briefly covered in this section.

20.6.1.2 Scope

The scope of this section is radiation monitoring related to measurement of occupational exposure. The monitoring system is designed to underpin the four Radiation Protection (RP) Claims as described in Section 20.2.1. Monitoring of worker external and internal exposures is described in this section. In addition, an aspect of monitoring of public external exposure is included.

It should be noted that the public internal exposure during normal operation is described in the Generic Environmental Permit – Radioactive Substances Regulation (GEP-RSR) [Ref-20.6-1]. Radiation monitoring of process fluids related to plant operation and control is within the scope of PCSR Chapter 14: Control and Instrumentation and its supporting documents [Ref-20.6-2][Ref-20.6-3][Ref-20.6-4][Ref-20.6-5][Ref-20.6-6]. A Criticality Incident Detection system (CID) is not provided for the UK ABWR except in the reactor core. The reactor core monitoring function is within the scope of PCSR Chapter 14 and its supporting documents [Ref-20.6-2] whilst the core design and criticality is described in PCSR Chapter 11: Reactor Core. The spent fuel storage racks are designed to avoid any risk of criticality in the most conservative conditions, and are designed to withstand all foreseeable fault loads (e.g. seismic events or dropped loads). These use boronated stainless steel with neutron-absorbing capabilities, and a geometrically safe arrangement to maintain an appropriate fuel-to-fuel distance. Similarly, sub-criticality is maintained in the canister basket during all Spend Fuel Export (SFE) process and credible fault scenarios. Its design also includes a specific geometrical arrangement and ensures sufficient neutron absorption is achieved. Further information about the criticality and its protection is addressed in PCSR Chapters 19: Fuel Storage and Handling, 32: Spent Fuel Interim Storage and the supporting documents [Ref-20.6-7][Ref-20.6-8].

Radiation monitoring equipment for measurement of occupational exposure is categorised as Other C&I System (OCIS) group and C&I common issues are described in PCSR Chapter 14.

20.6.2 Legislation, Standards and Guidance

The UK ABWR is designed to comply with UK legislation. Appropriate national and international standards are incorporated into the design. Approved Code of Practice (ACoP) is referred as Relevant Good Practice (RGP) within this section.

20.6.2.1 The Ionising Radiations Regulations 1999

The Ionising Radiations Regulations 1999 (IRR99) [Ref-20.6-9] establishes the regulatory framework for safe working with ionising radiation. IRR99 is based on EU Basic Safety Standards [Ref-20.6-10]. IRR99 ACoP [Ref-20.6-11] is provided as RGP to meet IRR99 requirements.

The monitoring requirements for designated areas are specified in IRR99 Regulation 19. The main purposes of monitoring are described in Guidance 19(1) of ACoP. To this end, radiation employers must provide suitable and sufficient equipment for carrying out monitoring, with equipment that meets Regulation 19(2)(a) and (b) of IRR99. In addition, IRR99 Regulation 18(3) and 21 requires that the radiation dose of all workers entering designated areas is also monitored.

20.6.2.2 IAEA International Basic Safety Standards

The International Atomic Energy Agency (IAEA) has published guidance that provides basic safety standards for radiological protection. This guidance provides the basis for radiation protection regulation adopted by all member states. Safety guidance covers the main aims of any monitoring programme as well as its requirements. [Ref-20.6-12][Ref-20.6-13] In addition, the IAEA basic safety standards [Ref-20.6-14] include requirements and guidance for radiological monitoring. The guidance defines the main goals of a monitoring programme as a means to check assumptions and validate the results of safety assessments.

20.6.2.3 IEC Standards

International Electrotechnical Commission (IEC) standards are applied for the UK ABWR C&I system as shown in PCSR Chapter 5: General Design Aspects, Section 5.8. As one of the C&I systems, the radiation and contamination monitoring meets relevant IEC standards.

20.6.3 Design Strategy

20.6.3.1 Design Principle

The UK ABWR is designed to achieve the four RP Claims as detailed in Section 20.2.1. The design is demonstrated as the system complies with the relevant High Level Safety Functions (HLSFs) in Chapter 5 and IRR99. Following the guidance of [Ref-20.6-15], the supporting document [Ref-20.6-16] divides the HLSFs into more specific C&I (OCIS) claims such as Safety Functional Claims (SFCs) and Safety Properties Claims (SPCs) to allow for a more robust substantiation of the radiation and contamination monitoring systems against the HLSFs. In addition, dividing the HLSFs into OCIS SFCs has allowed for categorisation of the safety functions. As described in detail in [Ref-20.6-16], radiation and contamination monitoring provides essential information to support those higher level claims from which the following design strategies are derived.

Radiation and contamination are monitored to confirm the radiological conditions of the plant and assess individual exposure. Measurement and assessment of individual exposure through suitable and sufficient radiation monitoring ensures compliance with individual dose targets and limits.

In order to satisfy the four RP Claims, the UK ABWR provides measurements from the following radiological sources:

- Direct radiation,
- Airborne contamination,

- Surface contamination.

They include the following types of radiation dependent on the potential nuclides:
- Alpha particles,
- Beta particles,
- Photons (gamma and X-ray),
- Neutrons.

The following parameters are measured:
- Ambient dose equivalent rate,
- Airborne activity concentration,
- Surface activity concentration,
- Personal dose equivalent.

These are measured by a combination of both installed and portable monitoring equipment. The installed equipment is provided at locations requiring frequent or continuous monitoring, with portable monitoring equipment being available to allow flexibility and accuracy during any works. In some instances, temporary fixed equipment is provided. The UK ABWR radiation monitoring framework is based on two methodologies that complement each other.

(1) Trend monitoring

The radiological condition of designated areas is trended and recorded over time. Data acquired can help to decide whether additional actions need to be taken where radiation or contamination levels indicate a change in condition of an area. Installed or temporary fixed equipment is used where there is a requirement for continuous measurement. Representative data from each area is measured and combined so that an assessment of radiological trending can be considered by plant level management.

(2) Accurate measurement

Precise values of radiation levels or contamination levels are measured. The data can then be used to determine the effective dose to works, which will be used to make informed decisions on work planning. Portable equipment is used for accurate measurement, because the radiation level strongly depends on the exact location of the monitoring point.

The typical approach to minimising occupational dose is to prevent unnecessary exposure by adequate radiation monitoring. When a worker accesses anywhere in a designated area, the radiation and contamination levels are confirmed to be within designed limits prior to entry. The levels are also monitored during the worker's stay in the designated area. If the measured level exceeds the specified limits, the work plan is rearranged to minimise the dose.

From this perspective, the ambient dose equivalent rates within any designated areas are measured and recorded. At strategic locations, the rates are continuously monitored and the data is centralised, displayed and recorded at significant locations for RP (e.g. Main Control Room (MCR)) to provide information regarding the plant's total radiological status. An alarm is activated at appropriate locations upon detecting high radiation levels to warn workers to avoid inadvertent exposure. Changes in plant operation are considered and radiation monitoring regimes are changed as appropriate.

Prevention and mitigation of radioactive contamination is also an essential approach to minimising the occupational dose. The airborne activity concentration within any designated areas is measured.

In some instances, process radiation monitoring function may provide supportive information to identify contamination. For example, monitoring the total air flow of Heating Ventilating and Air Conditioning System (HVAC) at the discharge route (e.g. main stack) provides an indication of the radioactive airborne contamination in the workplace. The surface activity concentrations on plant, items (including Systems, Structures and Components (SSCs)), and workers are measured. In addition, surface contamination on workers is measured prior to their exiting the designated area as well as during the worker's stay in the area (as required). According to airborne/surface contamination characteristics, prevention and mitigation of contamination spread are specifically reviewed and incorporated in the monitoring programme.

The evidence that occupational doses are less than regulatory limits and also As Low As Reasonably Practicable (ALARP) is provided based on the actual measurement data. Accurate determination of radiation and contamination levels allows the operator to plan and manage work in radiologically designated areas.

The personal dose equivalent from external exposure is continuously measured during any stay in the designated area. Also, the personal dose from internal exposure is assessed (e.g. based upon measured airborne activity concentrations and calculations). The total effective dose is then assessed using this information. Dose histories of all workers are recorded to comply with Regulation 18(2) and 21 of IRR99. The future licensee will engage the services of an Approved Dosimetry Service (ADS).

The radiation levels at the site boundary are continuously measured. Although the primary purpose of these measurements is the monitoring of plant operating status (and potential deviations), this data can also be used to provide supportive information for the assessment of public exposure. If the measured radiation level exceeds the prescribed level, measures may be taken to reduce the public dose.

Sufficient quantity of equipment is available, along with sufficient space for periodic inspection and maintenance. All equipment is periodically maintained and calibrated with a method traceable to the national standard to ensure correct performance and to comply with Regulation 19 of IRR99.

20.6.3.2 Safety Category and Class

The UK ABWR safety categorisation and classification is defined in PCSR Chapter 5, Section 5.6. The radiation and contamination monitoring system related to RP provides timely information of radiological risks to ensure that the dose remains ALARP. Therefore, based upon the current safety case information, radiological monitoring system is categorised and classified as Safety Category C and Class 3.

20.6.4 Installed Equipment

20.6.4.1 Monitoring Location

In the UK ABWR, the radiation and contamination are measured as necessary anywhere and anytime with suitable monitoring equipment. During normal operation, the following factors are taken into account to determine where the use of installed equipment is justified:

- frequency of access;
- occupancy factor (time);
- radiation or contamination level;
- transient according to operational status.

The four factors are interlinked. The feature "high radiation level" alone does not necessarily result in the installation of the equipment if the access frequency is limited. Furthermore, access to high radiation or contamination areas is eliminated by building design or controlled by engineered features, where reasonably practicable, and therefore, the risk is sufficiently minimised. In addition, areas that may be subject to transient radiological hazards due to operational status should be identified to avoid unnecessary exposure.

The criteria to provide the installed equipment are:

1 Strategically important locations for NPP operations.

2 Boundary of the designated areas.

3 Locations in the designated area where the worker routinely accesses or stays and the radiation or contamination level is high or varies according to operational state.

   3-1 If the radiation or contamination level tied in with access frequency and occupancy factors results in a significant dose uptake risk.

   3-2 If transient radiation or contamination level results in significant dose uptake or increase in radiation or contamination level.

   3-3 If a fault could result in significant dose uptake or increase in radiation or contamination level.

4 Locations where radiation or contamination monitoring signal is used for engineered controls.

5 Locations where safe occupancy is necessary in the event of a fault.

These criteria include considerations described in ACoP [Ref-20.6-11] with additional considerations based on the radiation risk associated with working in the designated area and potential dose impacts as a result of fault scenarios. In addition, recommendations in the international standards are incorporated into the design, if applicable, as good practice. [Ref-20.6-16].

20.6.4.2 Installed Area Monitoring Equipment (Indoor)

Installed area monitoring equipment is provided to continuously measure, indicate and record the photon ambient dose equivalent rate at strategic locations throughout the plant. The system activates an alarm upon detecting a high radiation level to warn workers.

Typical monitoring locations are shown in [Ref-20.6-16]. All the detectors are positioned such that their measurements are representative of the areas in which they are installed. Inadvertent shielding from SSCs is minimised. The height of the detector position is comparable for all monitoring locations as far as is practicable. Because periodic calibration and maintenance is necessary, sufficient space for access to the monitoring equipment is provided around the detector.

Measurement data and the status of equipment are communicated centrally to indicate and record information regarding the plant's total radiological condition. The information is indicated at the required locations for RP (e.g. MCR). An alarm is activated at those locations as well as locally if the radiation level exceeds the pre-determined value. The centralised system is dedicated to the plant

control system in order to be operable under any operating mode. Each monitoring channel is independent and not affected by any failures in other channels. It should be noted that detached areas such as the radwaste storage facilities or the Spent Fuel Interim Storage (SFIS) areas which are still at the concept design stage during GDA may be monitored independently from that centralised system based on the future radiation monitoring programme.

In order to ensure continuous monitoring, the system is powered by AC Uninterruptible Power Supply (UPS). The range of detector measurement covers as a minimum each radiation zone at each monitoring location. The equipment meets environment conditions (e.g. range of temperature, humidity, and so on) at all monitoring locations. Signal processing is designed to operate as fail-safe. Reliability of the entire system, as well as for each assembly, is managed according to the approach described in PCSR Chapter 14.

20.6.4.3 Installed Area Monitoring Equipment (Outdoor)

Installed area monitoring equipment is provided to continuously measure, indicate and record the photon ambient dose equivalent rates at the site boundary. The system activates an alarm upon detecting a high radiation level to warn workers.

The detectors are positioned such that the measurement is representative of the area in which they are installed. Inadvertent shielding from any natural structures is minimised. The height of the detector position from the ground is comparable for all outdoor monitoring locations as far as is practicable. Because periodic calibration and maintenance is necessary, sufficient space for access to the monitoring equipment is available.

Measurement data and the status of equipment are communicated centrally to indicate and record information. The information is indicated at the required locations for RP (e.g. MCR). An alarm is activated at those locations if the radiation level exceeds the pre-determined value. The centralised system is dedicated to the plant control system in order to be operable under any operating modes. Each monitoring channel is independent and not affected by any failures in other channels.

In order to ensure continuous monitoring, the system is powered by the Emergency Diesel Generator (EDG) in case there is loss of off-site power. The range of measurement covers the design basis fault conditions. The equipment meets outdoor environment conditions (e.g. range of temperature, humidity, and so on) at all monitoring locations. Signal processing is designed to operate as fail-safe. Reliability of the entire system, as well as for each assembly, is managed according to the approach described in PCSR Chapter 14.

20.6.4.4 Installed Contamination Monitoring Equipment

Installed contamination monitoring equipment (e.g. portal monitors, hand and foot monitors and small articles monitors) is provided to monitor the radioactive contamination on workers, equipment and other items as they exit designated areas to prevent exposure from the accidental spread of contamination to non-designated areas. The monitoring will be carried out according to the radiation monitoring programme defined by the future licensee.

The contamination monitoring equipment is located at the boundary of the designated area. All workers must pass a check point at the entrance of the designated area in order to monitor the time spent in the area and the radiation exposure during their stay. Prior to exiting the area, the surface contamination on the worker's body is measured along with the contamination present on any equipment or items that are also leaving the designated area. The UK ABWR is designed such that the access check point is unique to a fleet of buildings in order to restrict the access route. At the

check point, a sufficient quantity of monitoring equipment along with sufficient space is provided.

20.6.5 Portable Equipment

20.6.5.1 Portable Area and Contamination Monitoring Equipment

Portable area monitoring equipment is provided to measure the ambient dose equivalent rate in any airspace. The equipment comprises gamma and neutron dose rate survey meters. Portable contamination monitoring equipment is provided to measure activity on/around any SSCs at any time. The equipment comprises alpha and beta contamination survey meters and air samplers. In addition, gamma dose rate survey meters are used as necessary. The monitoring is carried out periodically and/or as necessary according to the radiation monitoring programme. The equipment is used under all operating conditions. A sufficient quantity of equipment is expected to be stored at locations as determined by the requirements of the radiation monitoring programme. Outdoor measurements are expected to use vehicle-based radiation monitoring equipment.

20.6.5.2 Portable Individual Monitoring Equipment

Portable individual monitoring equipment is provided to measure the personal dose equivalent of workers during their stay in the designated area. All workers entering the designated area must wear a dosimeter on their work clothes. Provision for a sufficient quantity of equipment is made at the entrance of the designated area.

20.6.6 Laboratory Equipment

An onsite laboratory is provided in the Service Building (S/B) to analyse radioactive samples quickly. The sampling and analysis is carried out periodically as required by the radiation monitoring programme.

20.6.7 Calibration and Testing

All instrumentation is calibrated by a method traceable to a national standard at an appropriate facility. Instrumentation will be removed from service for calibration, and replaced with instrumentation that is identical or provides an equivalent service to allow for continued operation whilst the removed instrument is calibrated. This process does not affect the other channel's functions.

20.6.8 Recording

The radiation monitoring data is recorded and can be used to demonstrate that radiation doses are less than the regulatory limit and ALARP. The testing and maintenance activities are recorded as one of the life cycle management requirements.

20.7 Dose Assessment for the Public from Direct Radiation

20.7.1 Introduction

This section describes public external dose assessment from direct radiation (including sky shine which is scattered radiation in the air) during start-up, power operation, shutdown and refuelling outages in normal operation in the GDA phase. This assessment methodology is in line with the ALARP demonstration methodology addressed in Section 20.4.

An overall public dose assessment, including internal exposure from environmental discharge and external exposure from direct radiation, can be found in Chapter 8: Prospective Dose Modelling of the GEP (Generic Environmental Permit) [Ref-20.7-1], which presents the methodology and results of the modelling undertaken for the prospective doses associated with the UK ABWR, and forms part of Hitachi-GE's GEP application for the Environmental Agency's consideration as part of the GDA.

20.7.2 Dose to the Public

This Section summarises the dose assessment for the public from direct radiation. Further information is addressed in [Ref-20.7-2].

20.7.2.1 Reference Design for UK ABWR Dose Assessment

A specific plant design was selected as a reference design to serve as a starting point for the UK ABWR dose assessment for the public. KK-7, which is the Japanese ABWR with the longest operational experience, so as to take into account the contributions from depositions on inner surface of equipment and piping, was selected as a reference plant design for the UK ABWR public dose assessment. In addition, UK ABWR specific information, such as locations of radioactive sources (distance to the site boundary), source terms (see Section 20.3) and requirements linked to architecture (see PCSR Chapter 10: Civil Works and Structures), are applied in the assessment.

20.7.2.2 UK ABWR Dose

The dose assessment for the public from direct radiation was carried out by computer analysis using input information based on the reference design and information specific to the UK ABWR. The calculation methodology for the dose assessment is detailed in Section 20.5.3.10.

In this dose assessment, the radioactive sources located above ground level and next to the outer walls and/or ceilings are considered as target sources since dose contributions from other radioactive sources are negligibly small because there is sufficient shielding from the ground, the intermediate walls and/or the ceilings, and that appropriate radiation zoning has been designed. Taking this into consideration, the following radiation sources have been categorised as target sources, which are the radiation sources considered in this dose assessment.

Table 20.7-1: Main Target Sources in Dose Assessment for the Public from Direct Radiation

Building	Main Target Source
Reactor Building	Reactor Core
Turbine Building	High Pressure Turbine (HPT) Low Pressure Turbines (LPTs) Moisture Separator Re-heaters (MSRs) Piping linked to above-mentioned equipment
Radwaste Building	Ventilation Filters
Condensate Storage Tank	Condensate Water within the Tank
Suppression Pool Water Surge Tank	Suppression Pool Water within the Tank

The dose assessment for the concept-design facilities, i.e. SFIS, ILW and LLW, will be carried out by the future licensee after the detailed design specification is established.

The public dose from direct radiation under normal operation is assessed according to the following conservative basis. The public is represented by an individual assumed to be located at the site boundary continuously i.e. for 8760 hours per year. Based on the occupancy pattern described in the IRAT (Initial Radiological Assessment Tool) methodology [Ref-20.7-3] [Ref-20.7-4], this individual is assumed to spend 50 percent of his/her time indoors. The dose to this 'most exposed person' is therefore calculated by multiplying the annual exposure time by the dose rate and then applying an appropriate location factor. The location factor is the ratio between the external dose rate indoors to the external dose rate outdoors. [Ref-20.7-5].

The dose assessment results for the public from direct radiation are shown below.

Table 20.7-2: Dose to the Public from Direct Radiation

Building	Distance: GDA site boundary (m)	Annual Dose (µSv/y)
Reactor Building	265	1.3E-02
Turbine Building	310	8.8E-01
Radioactive waste Building	243	2.5E-02
Condensate Storage Tank	240	4.6E-03
Suppression Pool Water Surge Tank	350	1.7E-02
Total	-	9.4E-01

Identification of potential dose reduction measures (or Mitigation Options 'MOs'), includes generic design features and administrative controls for protection against direct radiation. These are identified and tabulated based on the hierarchy of controls, i.e. ERIC-PD (Eliminate, Reduce, Isolate, Control, Personal protective equipment and Discipline) methodology. Some examples of MOs are shown in Section 20.4.3.1. Reasonably practicable MOs are incorporated into the UK ABWR design. The, specific design features and administrative controls adopted that minimise radiological risks for the UK ABWR, are summarised in Section 20.5.

In the assessment of MOs it is first considered whether radiological risks may be completely eliminated or not. Elimination of the radiation sources is not reasonably practicable because, for example, the reactor core is considered as a target source in case of the reactor assessment, and the core is essential to general thermal energy (see PCSR Chapter 11: Reactor Core). The high and low pressure turbines are considered as one of the target sources in case of the turbine assessment, and

function of the turbine is to convert into mechanical energy from the thermal energy of the steam entering the turbine (see PCSR Chapter 17: Steam and Power Conversion Systems). Elimination of exposure time is also not reasonably practicable because the occupancy for the public is not controlled and limited.

Risk reduction options are next considered because the elimination options are not reasonably practicable. The water chemistry control and radiation shielding are shown here as examples of the reduction options. Water chemistry control regime for the UK ABWR is determined appropriately as a result of optioneering to ensure that all relevant risks including radiological risks are ALARP (see PCSR Chapter 23: Reactor Chemistry). The assessment of radiation shielding has demonstrated that the shielding is appropriately located and of adequate thickness to reduce doses ALARP. Further optimisation was not considered reasonably practicable as increased shielding thickness did not result in a significant reduction in the calculated exposure to the public.

To ensure that the design reduces doses to levels that are ALARP and represents good practice, the design target is set for the individual dose to the public, i.e. the individual dose constraint to the public which was set to 20 μSv per year based on the BSO as described in the NSEDPs for any person off the site (see Table 20.4-2 in this chapter). The calculated UK ABWR dose to the public from direct radiation is lower than the UK ABWR dose constraint for the public.

Therefore, it can be concluded that the public dose from direct radiation is ALARP as the calculated UK ABWR dose is lower than the individual dose constraint and there is no further reasonably practicable dose reduction measure.

This section considers the public dose from direct radiation only, i.e. external dose to the public. A complete assessment, i.e. external and internal dose to the public, is provided in [Ref 20.7-1].

20.8 Worker Dose Assessment

20.8.1 Introduction

This section describes the following worker dose assessment during start-up, power operation, shutdown and refuelling outages in normal operation in the GDA phase:

1. Employees working with ionising radiation
2. Other employees on site

The UK ABWR worker dose assessment aims at:

- Optimising radiological protection so that doses are ALARP
- Minimising dose uptake to most exposed groups

The UK ABWR design is an improvement on the predecessors and takes into account operational and design experiences, i.e. ABWR operational and design experiences. The development of the ABWR began in 1978, and was first adopted in the construction of the KK-6 and KK-7 (Kashiwazaki-Kariwa Unit 6 and 7). These reactors commenced commercial operation on 7th November 1996 and on 2nd July 1997, respectively. This marked the first commercial operation of the ABWR in the world. The majority of equipment for both the KK-6 turbine island and the KK-7 nuclear island were supplied by Hitachi, Ltd.

The ABWR was jointly developed by Japanese electric utilities and plant technology suppliers, including Hitachi Ltd. (Japan) and General Electric Company (GE) (USA). The ABWR design was based on the evolution of conventional Boiling Water Reactor (BWR) technology and therefore represents a significant improvement over conventional BWRs. In addition, the ABWR has attained a favourable status under Japan's BWR Improvement and Standardisation Program. Several improvements of ABWR components and facilities were introduced relative to those of conventional BWRs; and shop tests, pre-operation tests and start-up tests have demonstrated that the components and facilities meet the required functionality and corresponding standards.

Hitachi-GE has already constructed four ABWRs and has continuously invested in optimisation and standardisation of the ABWR design. Therefore Hitachi-GE is confident that with the experience it has accumulated in all these projects, it can successfully design and construct ABWR power plants.

Further information on the genesis of the ABWR design is addressed in [Ref-20.8-1].

From the aspect of radiation protection, the ABWR combines advanced facility design features and administrative procedures designed to keep the occupational radiation exposure to personnel, and contamination, as low as reasonably achievable (ALARA). During the design phase, layout, shielding, ventilation and monitoring instrument designs are integrated with traffic, security and access control. Operating plant results are continuously integrated during the design phase. Clean and controlled access areas are separated.

Reduction in the plant personnel exposure is achieved by (1) minimising exposure time in radiation and/or contamination areas, and (2) minimising radiation and contamination levels in routinely occupied areas. These minimisations are based on design improvement relative to the current operating BWRs, e.g. the elimination of external recirculation loops by adopting reactor internal

pump system has allowed the reduction in worker dose Reactor Recirculation System inspection. Further information of the improvements from the BWRs is addressed in [Ref-20.8-2].

Radiation exposure of ABWR over several years compared to BWR (including ABWR) and PWR is shown on the figure below [Ref-20.8-2].

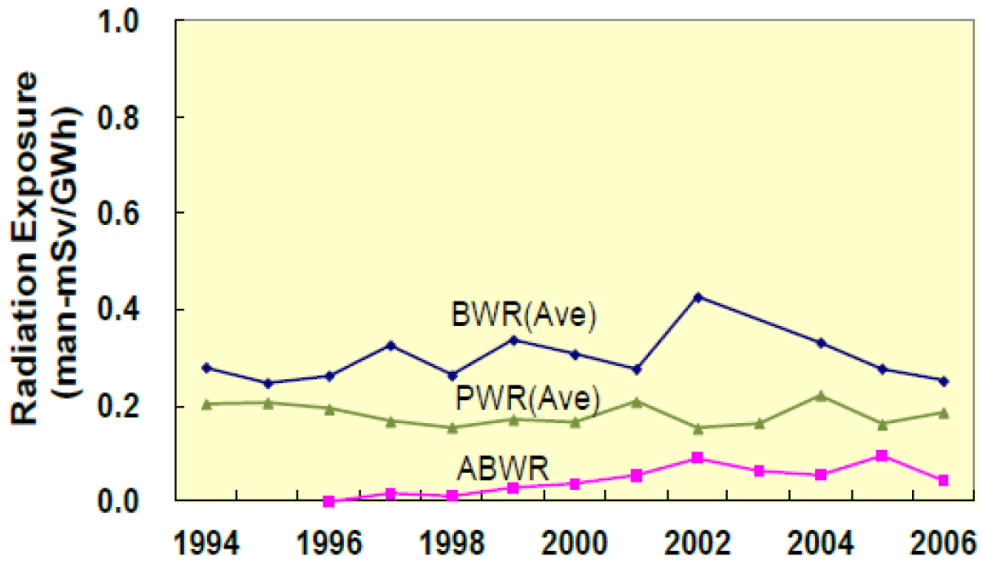

Figure 20.8-1: Trend of Radiation Exposure
*Source: "Operational Status of Nuclear Facilities in Japan", JNES [Ref-20.8-2]

UK ABWR worker dose assessment was carried out based on the methodology which is addressed in Section 20.4. UK ABWR worker dose assessment for employees working with ionising radiation and other employees on the site are detailed in the next sections.

20.8.2 Dose to Employees Working with Ionising Radiation

This section summarises dose assessment for the employees working with ionising radiation. Further information is addressed in [Ref-20.8-3].

20.8.2.1 Reference Dose for UK ABWR Dose Assessment

A specific plant dose has been selected as a reference dose which is a starting point for the UK ABWR worker dose assessment. KK-7, which is the Japanese ABWR with the longest operational experience, so as to take into account the contributions from depositions on inner surface of equipment and piping, was selected as a reference dose for the UK ABWR.

Worker dose in the ABWR is primarily due to direct radiation from components containing radioactive material. Collected operational data during periodical inspections from KK-7 have shown that the maximum individual worker dose is between the UK BSL legal limits and BSO. The following table shows the relevant KK-7 dose information during periodical inspections.

Table 20.8-1: KK-7 Worker Dose Information during Periodical Inspection

Number of Periodical Inspection	5th	6th	7th	9th
Total Collective Dose (person-Sv)	0.6	0.8	0.8	0.7
Average Individual Dose (mSv)	0.2	0.3	0.3	0.2
Maximum Individual Dose (mSv)	8.3	11.1	11.5	11.9

*: Further information is addressed in Operational Status of Nuclear Facilities in Japan [Ref-20.8-5]. The 8th periodical inspection is excluded from this table as the 8th periodical inspection includes non-routine tasks that were carried out following the Niigata ken Chuetsu-oki Earthquake in 2007.

For the ABWR, workers carry out normal operation, maintenance and inspection during start-up, power operation, shutdown and refuelling outages. The major activities of the Japanese ABWR are shown below.

Table 20.8-2: Major Activities of ABWR

Items	Example
Reactor Building	-
RPV	Maintenance for Reactor Pressure Vessel (RPV) and Core Internals: Reactor Internal Pump (RIP) and Fine Motion Control Rod Drive (FMCRD)
Fuel	Maintenance for Fuel and Fuel Handling
Primary Valves	Maintenance for Main Steam Isolation Valves (MSIVs) and Safety Relief Valves (SRVs)
Instrumentation	Maintenance for Local Power Range Monitor (LPRMs) and Traversing In-Core Probe (TIPs)
RHR/CUW	Maintenance for Piping, Heat Exchangers, Pumps and Valves
Turbine Building	-
Turbine	Turbine Overhaul
Primary Valves	Maintenance for Main Stop Valves (MSVs)
Condensate System	Maintenance for Condenser, Piping, Pumps and Valves
Radwaste Building	-
Storage Tanks	Maintenance and inspection of storage tanks and associated secondary containment, level gauges and sump alarms
Pumps and Valves	Maintenance for Pumps and Valves
Radwaste Handling	Maintenance for Radwaste Handling
All Relevant Buildings	-
Each Building	Surveillance / Patrol

Based on the radiological OPEX data for KK-7 and averaged over 10 years, the reference collective dose for the UK ABWR, is estimated to be about 0.6 person-Sv per unit per year. This collective dose was analysed and ranked by collective dose to prioritise the worker activities with the highest radiological risks. The following activities are the top eight activities from the aspect of collective dose. The total collective dose due to these top eight activities accounts for about 50 percent of the total collective dose during start-up, power operation, shutdown and refuelling outages. From the aspect of contamination, some of the activities listed here are also activities carrying high contamination risks.

(1) Reactor Opening/Closing Series Work
(2) In-service Inspection (ISI) Preparations/Work in Drywell
(3) RHR Pump Inspection and Maintenance
(4) Reactor Well Decontamination

(5) FMCRD Replacement/Overhaul
(6) RIP Overhaul
(7) CUW Heat Exchanger Inspection and Maintenance
(8) CUW Pump Inspection and Maintenance

In the GDA phase, the worker activities with the highest radiological risks mentioned above are selected as representative examples to demonstrate that worker dose is ALARP. These are defined as the 'High Dose Activities'.

The maximum individual dose, according to the KK-7 radiological OPEX data, is associated with periodical inspection (refuelling outages) [Ref-20.8-5], and is estimated to be about 11 mSv per year.

The remaining 50% of the total dose is spread over a large number (several hundreds) of activities, such as maintenance and inspection in the turbine and radioactive waste buildings.

20.8.2.2 Radiological Risk Assessment using Reference Dose

The radiological risk assessment has been carried out based on worker activities and OPEX data. In this assessment, the key radiation source, which highly contributes to external exposure to workers, and the key activity, which leads to higher airborne contamination (potential internal exposure to workers), during worker activities are identified.

The key sources for direct radiation and activity for contamination during the Reactor Opening/Closing Series Work are summarised below as an example of the High Dose Activities.

Reactor Opening/Closing Series Work

The reactor is opened during refuelling outages for refuelling. To open the reactor, several items such as the reactor well covers, RCCV top head and RPV top head are removed to the operating deck. The dryer and separator are then removed to the dryer separator pit. Then, refuelling is carried out. Reactor closing steps are the same as reactor opening steps carried out in reverse order. During these activities, the RPV top head removal and installation are the worker activities with higher collective doses. Also, removal is selected as a representative example as the removal and installation have similar working steps, and opening leads to potential contamination. Therefore, this assessment focuses on the RPV top head removal. During this activity, workers are located at the operating deck and within the reactor well in the reactor building. The key source for direct radiation is the dryer within the RPV and the key activity which includes a task associated with contamination is the surface maintenance of RPV head and body flanges.

20.8.2.3 UK ABWR Dose

(1) Implementation of MOs and ALARP Review

To consider further reduction measures from the reference dose, generic design features and administrative controls for contamination control and protection against direct radiation, which are defined as the Mitigation Options 'MOs', are identified and listed based on the hierarchy of controls, i.e. ERIC-PD (Eliminate, Reduce, Isolate, Control, Personal Protective Equipment and Discipline) methodology. Examples of the MOs are shown in Section 20.4.3.1. These MOs are implemented to the radiological risks.

Once the risk assessment is undertaken and the mitigation options are implemented, the next phase is to carry out a systematic review to look for any additional dose reduction measures that can be

implemented. The search for additional risk reduction measures is an iterative process where the radiological risk can be demonstrated to be ALARP if no further risk/dose reduction measures can be implemented without efforts and cost judged to be disproportionate.

In most cases, there are a number of options available to reduce dose or risk. The identification and subsequent assessment of such options, referred to as 'Optioneering', is a very important part of the ALARP process. It should be noted that the implementation of the mitigation options has already followed this process and has also involved the relevant stakeholders, including the technical experts with good plant knowledge and maintenance procedures.

Another review is carried out using a checklist of factors that can influence dose or risk. The checklist used was taken from 'A Nuclear Industry Good Practice Guide on the application of ALARP to radiological risk' [Ref-20.8-6]. The assessment of options depends on the complexity or size of the task. In some cases, assessment may be carried out on the basis of good engineering judgement, others may require a full quantitative assessment. The assessment is described in the GDA ALARP Methodology [Ref-20.8-7] and includes parameters such as: total cost of the proposed options, discount over the plant lifetime, value of risk reduction and gross disproportionality. The overall aim is to form a balanced view on the benefits and detriments of each option, including the 'do nothing' option, and to make a decision on which one to select.

In addition, onsite workers operational feedback from the reference plant (KK-7) and other BWRs were appropriately incorporated into the UK ABWR design.

The MOs implementation and worker-dose ALARP review for the RPV top head removal at the operating deck and in the reactor well are summarised below as an example of the High Dose Activities.

RPV Top Head Removal

The protection against direct radiation and contamination control for this worker activity are summarised below and the MOs implementation is demonstrated.

(a) Area designation and demarcation

The radiological classification of the working area is R4C3 around the reactor well and R3C3 at the operating deck. The area classification is setup to support all maintenance activities in the area, not only the RPV top head removal.

(b) Containment and ventilation

The C3 designation covers the entire operation deck. Containment is provided by the physical properties of the area including walls, floor, ceiling and doors. Engineered openings are limited to allow access and egress of workers as well as import and export of equipment and waste. Where openings are not used, they are kept in closed position and sealed as far as reasonably practical.

Cascade ventilation is provided in the area by the HVAC, ensuring air circulation and sufficient air changes covering the entire operating deck. Sufficient airflow is also provided at those engineered opening including access/egress barriers and waste/tools export doors.

In the event of a fault/accident which would result in a release of radioactive material, ventilation is automatically switched from the HVAC to the SGTS (Standby Gas Treatment System) and containment will continue to be provided.

Temporary ventilation (mobile extraction unit) will be deployed if required.

(c) Change facilities and movement in/out of the area

Change facilities are located at the boundaries, between areas of different contamination classification, all the way from C1 to C3. The purpose of the change facilities is to support the movement of workers in and out of the area whilst maintaining adequate control of contamination. The change facilities design and setup includes demarcation, signage, management of new and used PPE, monitoring, and movement of equipment and waste. Suitable washing and decontamination facilities are included in the design of the service building.

(d) Working environmental conditions (including working space)

Hitachi-GE have developed the Human Factors Engineering Specification (HFE Spec) which provides requirements for the UK ABWR design to ensure it meets UK and international standards and good practice guidance in considering human limits and capabilities. The HFE Spec includes requirements for access, clearance, protection from hazards (radiological and conventional) and other features of the working spaces within the plant, including working environmental factors such as temperature and noise, in order to support optimum task performance. Further information is addressed in PCSR Chapter 27: Human Factors.

For radiological protection purposes, sufficient working environmental conditions, in particular space, are required to reduce worker exposure to radiation So Far As Is Reasonably Practicable (SFAIRP). The dryer within the RPV is the main source of radiation and sufficient distance is available to the workers. In this case, equipment is the main factor in deciding the proximity of workers to the source of radiation rather than space. Waste is also a source of direct radiation and contamination. A space is available to carry out waste management activities, including segregation and packaging.

(e) Reduction of sources of radiation and contamination

The primary source of radiation in the work area is the dryer located in the RPV. After the RPV top head removal, the workers in the reactor well are mainly affected by the dryer. In this case, radiation shielding for the workers is provided by the water within the RPV. To reduce this worker dose, the water level within the RPV is appropriately controlled.

The management of waste in the work area, including accumulation and storage will also contribute to reducing doses to workers SFAIRP.

Use of suitable surface finish, temporary covers, clean-up and good housekeeping are paramount in reducing the contamination levels in the area and consequently the potential for spread of contamination and internal dose uptake SFAIRP. The entire operating deck has a surface finish that is easy to decontaminate. The locations of additional temporary floor covers and sheeting will be determined by the future licensee who will consider a balance between reducing the presence of non-fixed contamination on the floor and reducing the amount of potentially active waste generated. The choice of sheeting material will consider the conventional risks of slips and trips.

It is important to note that water chemistry and appropriate selection of materials will reduce the generation of contaminants and sources of direct radiation. This is of particular importance in the radiation protection programme of the whole facility, not just the RPV top head removal.

(f) Reduction of occupancy

Once the sources of radiation have been reduced, the next step is to reduce the duration of the activity, in particular occupancy in relatively high dose rate areas. The duration of the activity is primarily linked to the setup and use of equipment as well as the number of people involved in the activity.

Monitoring carried out by SQEP Health Physics Monitor (HPM) person and under suitable supervision will ensure that the conditions in the area are routinely reviewed and that workers continue to reduce their occupancy in relatively elevated dose rate areas.

The future licensee's management arrangements will ensure that tasks are designed to be performed efficiently and the number of workers involved is optimised. In this way, the collective dose to workers is minimised, including reducing the risk of delays, and the need for remediation of work that could arise as a result of human error and injury. The optimum crew size will be where an effective balance is struck between having enough personnel to reduce overall task time and provide adequate supervision to ensure task performance requirements are met without having any unnecessary personnel involved. The arrangements will also ensure that access to the area is restricted to those involved in the relevant tasks.

(g) Equipment/Tools

The main equipment used in this activity includes the following:

- Stud bolt tensioner
- Reactor building crane

The stud bolt tensioner is designed taking into account operation time, handling, storage, complexity, maintenance, reliability and worker dose. It enables the de-tensioning and tensioning the stud bolts.

The reactor building crane is categorised as Safety Category A and the SSCs which deliver it are designed to meet Safety Class 1 requirements. It enables the lifting and transfer of components over the RPV and SFP, and ensure that the risk of drop load is reduced to an acceptable level.

Some equipment is used for the purpose of reducing the sources of radiation and contamination in the area. These include items such as mobile ventilation, nuclear vacuum cleaners and tacky wipes. Other tools and equipment are used for the purpose of carrying out radiological monitoring.

The choice of equipment, including hand tools, and their mode of operation considers the safety of the plant, particularly the prevention of drops into the RPV and can impact how long tasks take to complete. Protecting the workers in terms of safe handling (mechanical, electrical, manual lifting, ease of use, correct size ergonomics, etc.) is another important aspect to consider during the selection of tools and equipment. In addition to that, consideration will also be given to reducing the risk of damage to PPE and skin puncture.

Suitable PPE including RPE will be selected with adequate consideration for radiological, environmental and conventional safety (slips and trips, in particular when using ladders and other access platforms). For this activity, workers would wear the coverall and the respirator. The PPE specification will be determined by the future licensee in the site specific stage.

(h) Monitoring

Monitoring of both the area and personnel includes direct radiation and contamination, using permanent and temporary area monitoring equipment as well as portable instruments in order to support the worker activity. At the operating deck and in the reactor well, permanent and/or temporary monitoring equipment will be installed.

Surveys using portable instruments will be carried out by SQEP HPM individuals in the reactor well and on the operating deck. Surveys will be carried out prior to work commencing, progressively as different components and parts are removed or dismantled, and on completion of the tasks. Monitoring will be carried out on equipment, general working area and on workers to reduce the spread of contamination and notice unexpected dose rate increase.

Personal dosimetry with real time monitoring and alarm functions will be used as a tool by the future licensee to restrict individual exposure.

(2) UK ABWR Dose

Other 'High Dose Activities' were demonstrated by applying the same approach as the RPV top head removal, i.e. radiological risk assessment for the tasks, MOs implementation and ALARP review against the radiological risk.

The specific design features and administrative controls to minimise radiological risks for the UK ABWR, are summarised in Section 20.5.

As a result, the UK ABWR doses, total collective dose and maximum individual dose, are estimated to be 0.5 person-Sv per year per unit, and 11 mSv per year, which are averaged over 10 years. In terms of the individual dose, the same value as the reference maximum individual dose (KK-7) is conservatively used for the UK ABWR individual dose.

In comparison with the UK ABWR design target for total collective dose and individual dose constraint, which are set to be 0.5 person-Sv per year per unit and 10 mSv per year (see Section 20.4.3.1), the estimated UK ABWR total collective dose and maximum individual dose are slightly higher than the target.

However, dose reduction due to the application of the RCM (Reliability Centred Maintenance) (a method of optimising maintenance to avoid excessive maintenance, which could otherwise result in unnecessary additional dose) will be considered in the site specific stage and further dose reduction from the current estimation can be expected. Further information on the UK ABWR maintenance is found in PCSR Chapter 30: Operation. In addition, GDA worker dose assessment focuses on dose reduction of the High Dose Activities. Dose reduction of the all other activities will be considered in the site specific stage.

For the individual dose, the dose reduction measures identified and applied to the total collective dose will also lead to reductions in individual dose on the UK ABWR. It is expected that individual dose should be lower than on the reference plant. The detailed assessment of the individual dose will be carried out in the site specific stage because the individual dose is highly dependent on the future licensee's individual, detailed working procedures and maintenance programme, and these will be determined in the site specific stage.

Therefore, it can be concluded that the estimated UK ABWR total collective dose per year per unit and maximum individual dose per year will meet the UK ABWR collective dose target and individual dose constraint.

20.8.3 Dose to Other Employees on Site

This section summarises dose assessment for the other employees on the site, who are located outside the buildings, (but on the site) from direct radiation. The other employees working without ionising radiation within the building are completely separated from the radioactive source and radiological risks by design features and administrative controls such as zoning and radiation shielding. Further information is addressed in [Ref-20.8-3].

20.8.3.1 Reference Design for UK ABWR Dose Assessment

A specific plant design has been selected as the starting point for the UK ABWR dose assessment for the other employees on the site. As discussed in Section 20.8.2.1, and taking into account the contribution from the accumulation of depositions, the KK-7 design has been selected as the reference design for the UK ABWR dose assessment. In addition, information specific to the UK ABWR, such as locations of radioactive sources (distance to the source building), source terms (see Section 20.3) and requirements in relation to architecture (see PCSR Chapter 10: Civil Works and Structures), are applied in the assessment.

20.8.3.2 UK ABWR Dose

The dose assessment for the other employees on the site from direct radiation is carried out by the computer code based on the reference design and the UK ABWR specific information. Calculation methodology for the dose assessment is detailed in Section 20.5.3.10.

In this dose assessment, the radioactive sources located above the ground level and next to outer walls and/or ceilings are considered as target sources since dose contributions from other radioactive sources are negligibly small because there is sufficient shielding from the ground, the intermediate walls and/or the ceilings, and that appropriate radiation zoning has been designed. Taking this into consideration, the following radiation sources have been categorised as target sources, which are the radiation sources considered in this dose assessment.

Table 20.8-3: Main Target Sources in Dose Assessment for Other Employees on Site from Direct Radiation

Building	Main Target Source
Reactor Building	Reactor Core
Turbine Building	High Pressure Turbine (HPT) Low Pressure Turbines (LPTs) Moisture Separator Re-heaters (MSRs) Piping linked to above-mentioned equipment
Radwaste Building	Ventilation Filters
Condensate Storage Tank	Condensate Water within the Tank
Suppression Pool Water Surge Tank	Suppression Pool Water within the Tank

Dose assessments for the concept-design facilities, i.e. SFIS, ILW and LLW, will be carried out by the future licensee after the detailed design specifications have been completed.

In the assessments presented in this document it is conservatively assumed that an individual 'other' employee is located at a distance of 30 m from each building containing the radioactive sources (outside of the buildings) for 2000 hours per year.

The dose assessment results for the other employees on the site from direct radiation are shown below:

Table 20.8-4: Dose to Other Employees on Site from Direct Radiation

Building	Distance (m)	Annual Dose (µSv/y)
Reactor Building	30	2.1E-01
Turbine Building	30	8.0E+00
Radioactive waste Building	30	7.0E-01
Condensate Storage Tank	30	6.7E-02
Suppression Pool Water Surge Tank	30	1.2E+00
Total	-	1.0E+01

To consider further dose reduction measures, generic design features and administrative controls for protection against direct radiation, which are defined as the Mitigation Options 'MOs', are identified and listed based on the hierarchy of controls, i.e. ERIC-PD methodology. Examples of the MOs are shown in Section 20.4.3.1. Reasonably practicable MOs are implemented to reduce the radiological risks. The specific design features and administrative controls to minimise radiological risks for the UK ABWR are summarised in Section 20.5.

First of all, it is considered whether radiological risks are completely eliminated or not. Elimination of the radiation sources is not reasonably practicable because, for example, the reactor core is considered as a target source in the reactor assessment, and the core is essential to generate thermal energy (see PCSR Chapter 11: Reactor Core). The high and low pressure turbines are considered as one of the target sources in the turbine assessment, and the function of the turbine is to convert the thermal energy of the steam entering the turbine into mechanical energy (see PCSR Chapter 17: Steam and Power Conversion Systems). Elimination of exposure time is also not reasonably practicable because other employees outside the buildings have to move on the site for their non-radiation activities.

The risk reduction options are considered as a next step because the elimination options are not reasonably practicable. The water chemistry control and radiation shielding are shown here as examples of the reduction options. Water chemistry control regime for the UK ABWR is determined appropriately as a result of optioneering to ensure that all relevant risks including radiological risks are ALARP (see PCSR Chapter 23: Reactor Chemistry). The assessment of radiation shielding has demonstrated that the shielding is appropriately located and of adequate thickness to reduce doses ALARP. Further optimisation was not considered reasonably practicable as increased shielding thickness did not result in a significant reduction in the calculated exposure to other employees.

To ensure that the design reduces doses to levels that are ALARP and represents good practice, design dose target, which is a useful design tool in the optimisation process, is set for the individual dose to the other employees on the site. The UK ABWR design target for the individual dose to the other employees on the site was set to 100 µSv per year based on the BSO for other site employees as described in the NSEDPs [Ref-20.8-4] (see Section 20.4.3.2),. The calculated UK ABWR dose to other employees on site for the UK ABWR is lower than the relevant dose target.

It can be concluded that there is no further dose reduction measures which are reasonably practicable and dose to the employees on the site from direct radiation is ALARP.

20.9 Post Accident Accessibility

20.9.1 Introduction

Fault and safety analyses for the UK ABWR design have identified and categorised a wide range of design basis accidents (DBAs) and severe accidents (SAs), and the systems, structures and components (SSCs) designed to stop the progression or mitigate the impact of such accidents. These SSCs are normally operated remotely from the main control room (MCR) or the backup building (B/B), depending on the accident sequence and SSC in question. However, in some instances, direct access to some SSCs by intervention personnel is required in order to initiate or maintain the safety function provided by the SSCs.

This section identifies representative DBA and SA sequences that would necessitate direct intervention by personnel and the mitigatory SSCs to which such access would be required during the course of the identified accident sequences – for the purpose of investigating post-accident accessibility requirements. Also, the dose to an intervention worker, predicted to arise from intervention tasks associated with the identified representative DBA and SA sequence, has been calculated for the most limiting potential access route to the selected SSC. The detail is described in Section 20.9.4.

The term 'post-accident' in this context is interpreted to comprise the period from the initiation of a postulated accident to the period when the plant is returned to a stable condition (typically a few hours to several days). Medium and longer term post-accident activities such as material/fuel recovery and clean-up operations are outside the scope of GDA.

20.9.2 Regulatory Background

(1) Statutory Requirements for a Radiological Emergency

When there is a risk of dose exposure for members of public that is greater than the limits specified in Schedule 1 of the Radiation (Emergency Preparedness and Public Information) Regulations 2001 (REPPIR regulations) [Ref-20.9-1] then the event would be classed as a radiological emergency, and a mitigation procedure for the radiological emergency is required. REPPIR regulations 14 and 15 specify the conditions for intervention in a radiological emergency. Site licence conditions 7 and 11 [Ref-20.9-2] under the Nuclear Installations Act 1965 (as amended) also contain specific requirements.

REPPIR regulations provide that emergency exposures to intervention personnel, in excess of the statutory employee dose limit stipulated Part I of Schedule 4 of the Ionising Radiations Regulations 1999 (IRR99) [Ref-20.9-3], maybe permissible during a radiation emergency. Such emergency exposures are only allowable for the purposes of saving life, helping endangered people, preventing large numbers of people from being exposed to ionising radiation, or saving valuable installations or goods. Subject to these conditions, the emergency dose levels normally regarded as acceptable by UK regulators are shown below [Ref-20.9-4]:

- **Effective Dose:** 100 mSv
- **Equivalent Dose to Skin:** 1000 mSv
- **Equivalent Dose to Eye Lens:** 300 mSv

Specific provision may be made explicitly for life saving actions. In this case it should be recognised that regulation 14(7) may take precedence over regulations 14(2), 14(3) and 14(4) of REPPIR.

However, it is desirable that for planning purposes the objective should normally be to apply the following levels:

• **Whole Body Dose:** 500 mGy
• **Dose to Skin:** 5000 mGy
* Doses quoted above in milligray are for deterministic effects.

Where an employee has undergone an emergency exposure, the employer shall ensure that the dose of ionising radiation received by that employee is assessed by an Approved Dosimetry Service that has been specifically approved by the UK regulator as able to assess accident doses. This is in accordance with Regulation 23 of IRR99, which states that dosimetry is required in the event of "any accident or other occurrence which is likely to result in a person receiving an effective dose of ionising radiation exceeding 6mSv or an equivalent dose greater than three-tenths of any relevant dose limit".

In the case of any dose assessments which relate to this section, confirmation will be needed to determine that the above requirements are satisfied.

(2) Dose Limitation for Employees in Special Cases

Regulation 11 of IRR99 recognises that, in certain circumstances, there may be work of a special nature required to be undertaken by an employee for which it may not be practicable to comply with the annual limit of 20 mSv per year for adult employees. This situation may arise when there are skilled tasks which need to be undertaken by key specialist staff. Where the employer can demonstrate that this is the case then the acceptable dose limits are:

• **Effective Dose:** 100 mSv in any period of five consecutive calendar years
• **Effective Dose:** 50 mSv in any single calendar year
• **Equivalent Dose to Skin:** 500 mSv
• **Equivalent Dose to Eye Lens:** 150 mSv*
* This limit may reduce to 20 mSv in-line with revised recommendations by ICRP (International Commission for Radiological Protection) in the future.

Dose limits associated with special cases may be relevant with respect to accessing rooms containing equipment that requires maintenance following an accident.

20.9.3 UK ABWR Post Accident Access Requirements

The framework for the management of accidents at a UKABWR plant is planned in a series of Accident Management (AM) procedures and documents. These include: Abnormal Operation Procedure (AOP); Emergency Operation Procedure (EOP); and Severe Accident Management Guideline (After Core Damage) (SAMG) in PCSR Chapter 22: Emergency Preparedness, Section 22.7.

Figure 20.9-1 illustrates the interfaces between these documents.

For DBAs, appropriate response to fault events (including intervention procedures and accessibility considerations) shall be guided by the provision of the AOP. For SA, the response to events shall be based on the EOP, Severe Accident Operation Procedures (SOP) and SAMG.

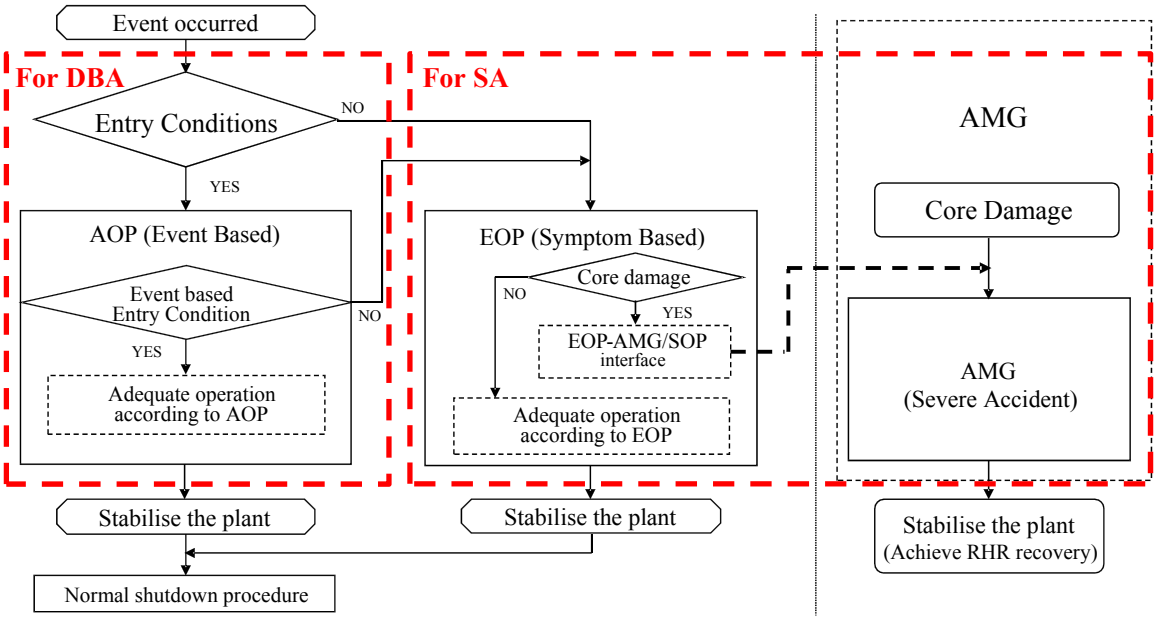

Figure 20.9-1: Emergency Procedures

Details of the safety systems for DBAs and SAs are provided in PCSR Chapters 24: Design Basis Analysis and 26: Beyond Design Basis and Severe Accident Analysis. The Safety System Logic and Control (SSLC), the main safety system, and the hardwired backup safety system are described in PCSR Chapter 14: Control and Instrumentation, Section 14.6. The severe accident management systems are described in PCSR Chapter 16: Auxiliary System, Section 16.7. The key SSCs involved in the management of DBAs and SAs include:

1. For DBAs, the key facilities/systems for responding to postulated DBA sequences are the main control room (MCR), Residual Heat Removal System (RHR), Reactor Building Cooling Water System (RCW), Reactor Building Service Water System (RSW), and fuel pool cooling purification system. The MCR constitutes the central hub from where the DBA mitigation systems are operated.

2. For SAs, the key facilities/systems for responding to postulated SA sequences are the main control room (MCR), Backup Building (B/B), technical support centre (T/C), Flooder System of Specific Safety Facility (FLSS), Flooder System of Reactor Building (FLSR), Filtered Containment Venting System (FCVS), Lower Drywell Flooder System (LDF), Alternate Heat Exchange Facility (AHEF) and Reactor Depressurization Control Facility (RDCF). It is noted that in the event of a severe accident, access to these facilities may be restricted by the accident conditions. In such a case, accident management is performed using the backup facilities which include the alternative AC power supply systems and the alternative cooling systems installed in Backup Building (B/B).

In evaluating post-accident access requirements, SSCs considered may be classified into two broad groups:

1. Primary SSCs – these are the SSCs that deliver the safety function required to mitigate the postulated events and are accident dependent (e.g. RHR, ADS and LPFL).

2. Supporting/secondary SSCs – these SSCs facilitate the functioning of the Primary SSCs and are largely independent of the accident being evaluated (e.g. back-up power supply systems).

To assess/demonstrate/illustrate the post-accident access requirements for the UK ABWR design, representative DBA and SA sequences postulated to challenge the functioning of the above mentioned facilities/systems have been identified. The basis for the identification/ selection of these accident sequences and associated SSCs are outlined below.

20.9.3.1 Post Accident Access Requirements for Design Basis Faults

Identification of Design Basis Faults (Fault Schedule)

The PCSR Chapter 24 summarises the process that was applied to develop a comprehensive list of specific design basis faults, and how this was used to produce the generic UK ABWR Faults Schedule that lists all of the bounding design basis faults that require assessment for GDA. The Fault Schedule provides details of all identified design basis faults and describes the bounding events for categories of design basis faults in Topic Report on Fault Assessment [Ref-20.9-7]. It also identifies the safety functions required for the mitigation of the listed DBA faults; and the SSCs that provide that safety function.

Selection of Representative DBA Sequence for Post Accident Accessibility Study from Fault Schedule

For DBA sequences, the Primary SSCs that deliver safety functions are designed to be operated remotely from the MCR. However, the capacity of some Supporting SSCs (such as backup power supply systems) to continue to facilitate the delivery of a safety function diminishes with time, and in the case of extended events (e.g. lasting several days), such SSCs could fail without timely intervention (e.g. emergency diesel generators will fail if the fuel is not replenished).

Hence, the representative event selected for the post accident accessibility study is one that involves the release of radioactive material over a period exceeding 24 hours, and which is likely to require direct intervention by workers as described in Topic Report of Post Accident Accessibility for DBA [Ref-20.9-6]. From the Fault Schedule [Ref-20.9-7], the event that satisfies these criteria is the loss of coolant accident (LOCA).

The bounding event for LOCA is a postulated double-ended guillotine rupture of a limiting line within the primary containment. After the initial blowdown into the primary containment (and the resultant build-up of pressure in the primary containment), two release pathways to the environment are postulated:

1. Leakage of radioactivity from the primary containment into the secondary containment, from where it is subsequently filtered by standby gas treatment system (SGTS) and released to the environment through the reactor stack.

2. Leakage of radioactivity from the primary containment through the main steam isolation valve (MSIV) and the main steam line (MSL) to the Turbine Building (T/B), with subsequent release to the environment at ground level.

Details of the plant conditions and assumptions, as well as other parameters considered in the analysis of LOCA events are presented in Attachment F of the Topic Report on Design Basis Analysis [Ref-20.9-5].

Identification and Selection of Target SSCs

The SSCs considered for design basis faults are those linked to the LOCA event, which satisfy the criteria below:

1. SSCs which require maintenance and/or inspection at a frequency that is less than the duration of the selected event (i.e. within 30 days)

2. SSCs which require to be accessed for essential operation (such as refuelling) at a frequency that is less than the duration of the selected event (i.e. within 30 days)

The SSCs that meets the criteria outlined above is the Light Oil Tank (LOT), located in the Emergency Diesel Generator Building (EDG/B). The LOT fuels the EDG (Supporting System) which powers systems that provide core cooling safety function such as the HPCF and LPFL (Primary System). The LOT has a design storage capacity of 7 days; thus, for events (e.g. LOCA) which could last for more than 7 days, the LOT will have to be refuelled otherwise the emergency power generators will fail, with the attendant consequences of loss of core cooling.

20.9.3.2 Post Accident Access Requirements for Severe Accidents

Identification of SA Sequences in Severe Accident Analysis

Detailed description of SA sequences is provided in the PCSR Chapter 26 in which there are twenty-six accident sequences categorised in Level 1 PSA and they are taken over as Plant Damage States (PDS) into the Level 2 PSA. These sequences were considered in post-accident accessibility study for SA.

Selection of Representative SA Sequence for Post Accident Accessibility Study

The management of postulated SAs may be conducted from the MCR; or the B/B in cases where PCV failure is postulated and where the use of alternate facilities and systems may be required. In the event of SA sequences leading to PCV failure, operators are assumed to relocate from the MCR to the B/B control room before the failure. Thus, neither SA cases (managed from the MCR or B/B) involve post-accident access requirements and have not considered further in the post-accident accessibility study.

From the above, the case adopted for the post-accident access is one where there is a failure of the water injection systems operated from the MCR, but one in which the operator successfully provides water injection through the alternate Flooder System for the Reactor Building (FLSR) which, together with containment venting, prevents RPV failure and the need for relocation to B/B.

Amongst potential SA sequences that meet the above criteria, the “TC-HP” sequence (non-LOCA event with failure of control rod insertion and core cooling, resulting in high pressure core damage in the short term) was selected as the representative SA sequence for post-accident accessibility study. A detailed description of the SA sequences is included in the Topic report on Post Accident Accessibility for SA [Ref-20.9-9]. This sequence has the earliest venting time and provides the most severe environmental conditions of all the SA sequences in which FLSR is credited. Details of the plant conditions and assumptions, as well as other parameters considered in the analysis of TC-HP sequence are presented in the Topic Report on Severe Accident Analysis [Ref-20.9-8].

Identification and Selection of Target SSCs

As inferred in the above section, the majority of SA emergency response/ accident mitigation systems are operated remotely from either the MCR or the B/B. However, the alternative water injection system FLSR is a manually operated system that needs to be directly accessed by operator. The FLSR system was therefore identified as representative SSC for the post-accident accessibility study.

The FLSR supplies cooling water from sources within the site boundary, using mobile pumping units, to the RPV and PCV to prevent damage to the reactor core and PCV rupture, in the event of SAs involving the loss of water injection to RPV, core melt and vessel failure. It also functions to maintain SFP water level in the event of SAs where the water supply function to the SFP has been lost. The detail is described in Chapter 16, Section 16.7.

The FLSR connects to the RPV feedwater line, PCV spray line, Lower D/W supply line, and the FPC water supply line through the FLSS piping network. The FLSR largely provides the same function as the FLSS; however, the FLSS system sources water from fixed tanks located in the B/B and therefore has less accessibility constraints compared to the FLSR in Chapter 16, Section 16.7.

20.9.4 Dose Assessment Results for an Intervention Worker

For the purpose of confirming the accessibility for an intervention worker in the DBA and SA sequences, the dose to the intervention worker, predicted to arise from intervention tasks associated with the identified representative DBA and SA sequence, has been calculated for the most limiting potential access route to the selected SSC. The habitability of the MCR under DBA and SA was also evaluated as part of the dose assessment for the intervention worker requiring access to the selected SSC's. The details of description are described in [Ref-20.9-6] and [Ref-20.9-9].

Dose Assessment Results for Representative DBA Sequence

The dose to an intervention worker, predicted to arise from intervention tasks associated with the selected DBA event (LOCA), has been calculated for the most limiting potential access route to the LOT (the selected SSC). The other DBA events considered are expected to be manageable from the MCR and would not require the worker to perform intervention tasks that would necessitate direct access to SSCs. The assessment also included the exposure of the worker whilst still in the MCR over the duration of the event.

The dose to a worker involved in intervention activities associated with the selected DBA is very low, and six orders of magnitude less than the relevant statutory limit. Therefore, the accessibility for the intervention worker and the habitability in MCR during DBA have both been confirmed.

Dose Assessment Results for Representative SA Sequence

As well as DBA sequence, the dose to an intervention worker, predicted to arise from intervention tasks associated with the selected SA event (TC-HP), has been calculated for the most limiting potential access route to the FLSR (the selected SSC).

The dose to a worker using the FLSR associated with the selected SA was evaluated by assuming some parameters related to human intervention such as walking speed, working time and time of intervention in [Ref-20.9-9] and is very low, and three orders of magnitude less than the relevant statutory limit. Therefore it has been confirmed that there are the accessibility for the intervention

worker during severe accident.

The habitability of the MCR under severe accidents was also evaluated as part of the dose assessment for the intervention worker requiring access to the selected SSC's. It was determined that should noble gases enter the MCR, radiation exposure to the workers could exceed relevant reference dose levels. A number of potential options were evaluated, including the use of a shielded shelter beside the MCR (which is the option adopted in the reference plant), or hardening of the existing design. However, these must be considered in line with the accident management philosophy of the future licensee, for example to consider when evacuation to an alternative control centre would be carried out. The accident management philosophy and the selection of appropriate safety measures will therefore be reviewed during the site specific stage. Within GDA, the design ensures that sufficient space is provided should the future licensee choose to adopt the option present in the reference design. Whatever option is selected, the MCR, or the alternative control centre, will ensure the safety of the operators and provide adequate command and control capabilities to enact the requirements of the emergency operating procedures and severe accident management guidelines.

20.9.5 Summary

This chapter has outlined the basis for the selection of mitigatory SSC to which access will be required in the event of representative DBA and SA sequences, for the purpose of evaluating post-accident access requirements for the UKABWR design. The selected SSCs and the associated representative accident sequences are:

	Representative accident sequence	Selected SSC
DBAs:	Large LOCA inside primary containment	Light Oil Tank (LOT)
SAs:	TC-HP (non-LOCA event with failure of control rod insertion and core cooling)	Flooder System for the Reactor Building (FLSR)

The dose to a worker involved in intervention activities associated with the selected DBA (LOCA) is very low, and several orders of magnitude less than relevant statutory limit. Therefore, the accessibility for the intervention worker and the habitability in MCR during DBA have both been confirmed.

The dose to an intervention worker, predicted to arise from intervention tasks associated with the selected SA event (TC-HP), has been calculated for the most limiting potential access route to the FLSR (the selected SSC). The dose to a worker using the FLSR was very low, three orders of magnitude less than the relevant statutory dose limit. Therefore, the accessibility for the intervention worker during severe accident has been confirmed. The habitability of the MCR under SA was also evaluated as part of the dose assessment for the intervention worker requiring access to the selected SSC. As a result, it has been indicated that dose reduction measures may be needed to satisfy the relevant reference dose levels. However, the selection of the safety measure is highly dependent on the SA management philosophy; the detail of which will be reviewed during the site specific stage and an appropriate option will be selected.

20.10 Assumptions, Limits and Conditions for Operation

20.10.1 Purpose

One purpose of this generic PCSR is to identify constraints that must be applied by a future licensee of a UK ABWR plant to ensure safety during normal operation, fault and accident conditions. Some of these constraints are maximum or minimum limits on the values of system parameters, such as pressure or temperature, whilst others are conditional, such as prohibiting certain operational states or requiring a minimum level of availability of specified equipment. They are collectively described in this GDA PCSR as Assumptions, Limits and Conditions for Operation (LCOs).

The definition of Assumptions, LCOs is addressed in PCSR Chapter 4: Safety Management throughout Plant Lifecycle, Section 4.12.

This section considers the identification of Assumptions and LCOs from a radiation protection perspective, including dose limits and design dose criteria, i.e. collective dose target and individual dose constraint, and those assumptions that have been made in relation to radiation protection design.

20.10.2 Limits and Conditions for Operation

LCOs that have an impact on radiation protection have been identified in the other chapters from the aspect of system, equipment and civil design. There are no specific LCOs identified by this chapter, but see Section 20.10.3 below for the limits that have been applied.

The representative LCOs in relation to radiation protection are summarised in the following table.

Table 20.10-1: Representative LCOs in relation to Radiation Protection

PCSR Chapter	Representative LCOs in relation to Radiation Protection
Chapter 11, Section 11.7.2	LCOs specified for the Reactor Core and Fuel, e.g. • Shutdown Margin (SDM) • Reactivity Anomalies • Control Rod Programme Controls • Minimum Critical Power Ratio (MCPR) • Refuelling Equipment Interlocks
Chapter 12, Section 12.6.2 (12.3.5, 12.4.3)	LCOs specified for the Reactor Coolant Systems, Reactivity Control Systems and Associated Systems, e.g. • Reactor Recirculation System (RRS) – The reactor thermal power and core flow within the design power-flow operating region • Nuclear Boiler System (NB) – Each MSIV and the ADS function of the seven SRVs operable • Control Rod Drive System (CRD) – No CR stuck and minimum number of CRs operable
Chapter 13, Section 13.5.2 (13.3.3, 13.3.4, 13.4.1)	LCOs specified for the Containment System and Emergency Core Cooling System, e.g. • Primary Containment Vessel (PCV) – Primary Containment, Two Primary Containment Air Locks and Eight Wetwell-to Drywell Vacuum Breakers operable • Standby Gas Treatment System (SGTS) – Two SGTS trains operable • Emergency Core Cooling System (ECCS) – Six ECCS RPV injection

PCSR Chapter	Representative LCOs in relation to Radiation Protection
	subsystems and seven ADS valves operable
Chapter 16, Section 16.8.2 (16.5, 16.7.3)	LCOs associated with Auxiliary Systems, e.g. • Heating Ventilating and Air Conditioning System (HVAC) – Reactor Area (R/A) HVAC: All number of R/A Supply and Exhaust Air Isolation Dampers operable / Main Control Room (MCR) HVAC: Required MCR HVAC divisions operable • Filtered Containment Venting System (FCVS) – Two containment venting system operable
Chapter 18, Section 18.15.2 (18.7.4)	LCOs associated with the Radioactive Waste Management, e.g. • Off-Gas System (OG) – The Safety Auxiliary Control System (SACS) functions operable
Chapter 19, Section 19.12.2 (19.6.3, 19.7.3, 19.8.3, 19.9.3)	LCOs specified for the Fuel Storage and Handling, e.g. • Fuel Handling Machine (FHM) – Interlocks during handling of irradiated loads operable • Reactor Building Overhead Crane (RBC) – Zoning interlock operable • Spent Fuel Storage Facility (SFS) – The SFP water level and temperature within operation limits • Fuel Pool Cooling, Clean-up and Makeup Systems (FPCM) – The SFP water level and temperature within operation limits
Chapter 23, Section 23.4.8, 23.5.4	LCOs specified for the Reactor Chemistry, e.g. • Reactor Coolant System and Associated Systems Chemistry • Spent Fuel Pool Water Chemistry
Chapter 30, Section 30.7.2	LCOs for Operation

20.10.3 Dose Limits and Design Dose Criteria

This chapter has described how Hitachi-GE have designed the UK ABWR taking into account design dose criteria, i.e. a collective dose target for workers and individual dose constraints for workers and the public. These criteria were set in relation to the legal limits addressed in IRR99 [Ref-20.10-1] and the BSO/BSL addressed in UK ABWR NSEDPs [Ref-20.10-2] and they have been used as a tool for the GDA ALARP demonstration for worker and public dose.

20.10.4 Assumptions for Radiation Protection Design

The following are the key assumptions made in the Radiation Protection engineering presented within this chapter.

- Assumptions related to Maintenance, Operation Control and Training
  The UK ABWR worker dose was estimated based on Japanese ABWR, i.e. KK-7, maintenance and operation programme including worker training. These will be reviewed in the site specific stage and the UK ABWR worker dose will be updated appropriately. These assumptions are addressed in [Ref-20.10-3].

- Assumptions related to Radiation Controls
  Design features in relation to radiation protection and contamination control were considered in the GDA phase as described in this Radiation Protection chapter. Assumptions have also been made in relation to administration controls, such as radiation and contamination management, including routine radiation and contamination survey, detailed PPE specification and use of temporary mobile devices. An example of radiation management is the assumption that the future licensee will have an effective regime for personal dosimetry and will use real time monitoring and alarm functions will be used as tools to restrict individual exposure. These assumptions will be reviewed in the site specific stage and any differences will be taken account of appropriately. Typical radiation and contamination management for each radiation and contamination zone is addressed in [Ref-20.10-4].

- Assumptions related to Radiation and Contamination Zoning
  Radiation and contamination zoning was set taking into account appropriate conservatisms in the design phase. Future licensee will optimise this radiation and contamination zoning in the site specific stage. They are addressed in [Ref-20.10-5].

- Assumptions used in Radiation Shielding Assessment
  In the shielding assessment for the UK ABWR, the detailed equipment and piping specification used as input information were assumed based on the reference Japanese ABWR plant because this detailed level of information is not developed in GDA. These assumptions are addressed in [Ref-20.10-6] and they will be reviewed in the site specific stage.

- Assumptions used in Penetration Design
  In terms of penetration design, the generic penetration design rule has been developed in GDA and it is assumed that the individual and specific penetrations will be designed by following such design rule in the site specific stage [Ref-20.10-7].

- Assumptions used for UK ABWR Source Term
  Key assumptions for the radioactive source term definition, e.g. flow rate of main steam, are addressed in [Ref-20.10-8].

- Assumptions used in Post-Accident Accessibility
  The dose to an intervention worker, predicted to arise from intervention tasks associated with the identified representative DBA and SA sequence, has been calculated by assuming some parameters related to human intervention such as working time and time of intervention. These will be considered and the UK ABWR worker dose for post-accident accessibility will be updated appropriately in the site specific stage. They are addressed in [Ref-20.10-9] [Ref-20.10-10].

- Assumptions related to Survey regarding Radiation Protection during Commissioning
  A shielding assessment has been conducted for GDA and this will be further developed during the site specific stage to confirm that design criteria can be met. The adequacy of the shielding will be tested as part of the future licensee commissioning programme to confirm that the design intent will be met and identify any weaknesses that require remedial actions. The commissioning programme will also include the testing of engineering safety features (e.g. interlocks) and warning devices to ensure that they operate effectively.

- Assumptions used in Public Dose Assessment (Direct Radiation)
  The dose to the public from direct radiation has been calculated based on the site geometry including distance between the radiation source and the site boundary assumed in the GDA dose assessment. They are addressed in [Ref-20.10-11].

- Assumptions used in Design on Access Control to High Dose Rate and High Dose Areas
  A generic design strategy on access control to high dose rate and high dose areas has been developed in GDA. Individual and specific access controls will be designed by following this design strategy in the site specific stage [Ref-20.10-12].

20.11 Summary of ALARP Justification

This section presents a high level overview of how compliance with the ALARP principle has been addressed for Chapter 20: Radiation Protection and how this contributes to the overall ALARP argument for the UK ABWR.

PCSR Chapter 28: ALARP Evaluation presents the high level approach taken for demonstrating ALARP across all aspects of the design and operation. It presents an overview of how the UK ABWR design has evolved, the further options that have been considered across all technical areas resulting in a number of design changes and how these contribute to the overall ALARP case. The approach to undertaking ALARP assessments during GDA is described in the GDA ALARP Methodology [Ref-20.11-1] and Safety Case Development Manual [Ref-20.11-2].

The purpose of all sections of Chapter 20 is to summarise the radiological protection safety case for the UK ABWR and demonstrate that radiation doses to workers and to the public comply with UK legal requirements and are as low as reasonably practicable. So in fact the entire chapter deals with ALARP; nevertheless this section summarises the ALARP case for radiation protection.

Fundamental to operation of a nuclear power plant is the fact that radiation is emitted and that workers and the public need to be appropriately protected from it. Hitachi-GE has a long history of designing, manufacturing and supporting operations with over 20 nuclear power plants, starting with the original BWR in the 1960s, through the evolution of the ABWR and its further development over three generations of design. Radiation protection measures and arrangements have thus developed over a long period of time and ongoing improvements have led to reduction in doses incurred. The starting position for the UK ABWR design was therefore one that is well proven from the perspective of radiation safety and radiological protection of workers and public.

As well as adopting this proven practice for UK ABWR, the potential for further risk reduction has been considered during GDA, in particular in light of UK good practice and the UK legal framework including IRR99 and the requirements to demonstrate that doses to workers and public are ALARP, i.e. no further reasonably practicable measures exist which could further reduce dose. This chapter has considered all operations where there is the potential for an exposure to ionising radiation including:

- Fuel handling for the complete fuel route from first delivery to site to placing in the spent fuel store (which is concept level) including the transfer of materials across the site.
- Reactor maintenance activities.
- Handling of radioactive sources and waste.
- All other facilities and activities involving exposure to radiation.

The first step in the ALARP assessment was to identify and quantify the radiological hazards associated with operation of the UK ABWR. This commenced with the definition of the UK ABWR design source terms and a demonstration that the plant radioactive inventory will be minimised, thus ensuring that radiation and contamination levels will be reduced ALARP. Consideration of the source terms includes radioactivity in the main reactor core and reactor water, supporting plant such as spent fuel pool and suppression pool and cooling systems, the main steam and turbine systems and radioactive waste systems etc. There have been significant efforts in GDA to ensure the source term is ALARP through careful choice of plant materials and chemistry regime from a range of potential options. This has resulted in significant changes from the Japanese ABWR which will provide reductions in dose i.e. measures which support the assertion that risks are ALARP.

Having established the basic hazard then the strategy and methodology were developed to ensure that workers and the public are adequately protected and that doses will be ALARP. This included the radiation protection principles applied to equipment design, system and layout, radiation shielding, ventilation, designation of areas, radiation and contamination zoning and control of contamination. In addition to the information provided in this PCSR chapter, the document map in Appendix A identifies where other reports provide relevant supporting information for these protection measures.

Risk reduction measures are systematically identified for each activity that is associated with a dose. In considering what additional mitigating options should be adopted, implementation of good practice is generally a basic expectation and the ERIC-PD hierarchy of control has been used, for example use of personal protective equipment should only be used as a last resort if no other means are reasonably practicable. The options to further reduce dose can include:

- Removal / reduction of radioactive sources
- Elimination / reduction of exposure time
- Shielding
- Increasing distance from source
- Reduction in surface and airborne contamination
- Monitoring and use of alarms and alerting devices
- Access Controls

The design development including ALARP (and BAT) optimisation is carried out taking into account all those identified risk prevention and reduction measures. Dose assessments are then carried out against design criteria and dose constraints. The reasonable practicability of further mitigation options are considered until it is demonstrated that there is no further reasonably practicable option.

To ensure that the resultant design reduces doses to levels that are ALARP and represent good practice, design criteria are set for the individual dose and collective dose to workers and for the individual dose to those members of the public who will receive the greatest doses. The setting of design criteria for individual doses to workers is consistent with the concept of dose constraints. The design criteria consider available OPEX data, and individual dose constraints are set at an appropriate fraction of the dose limits.

However, it should be noted that mitigating options for radiological protection are not always implemented in isolation because a holistic approach has been adopted to optimise the design and reduce all risks to ALARP, taking into account other relevant factors, for example the interface between normal and emergency situations, or protection of the environment.

Application of this strategy has demonstrated that the protection and provisions against direct radiation and radioactive contamination are appropriate and that external and internal doses to workers and the public will be ALARP.

To support this ALARP assessment, an important element of the demonstration that protection measures are effective, is the detailed assessments of external and internal doses to on-site workers that have been undertaken for key activities. These cover normal plant operation, i.e. start-up, power operation, shutdown, refuelling outages, maintenance and decommissioning, as well as accessibility to facilities following faults and accidents. All relevant buildings and facilities on the UK ABWR site have been included. Human Factors task analysis as well as relevant OPEX has been included within this to ensure that dose estimates are realistic based on suitable task activities and justifiable task completion times, representative movement speeds during normal and emergency operation

scenarios and an understanding of human behaviour under various operating conditions. The workers doses that have been predicted are slightly higher than the design criteria and dose constraints, but the doses can be achieved these criteria and constraints by the further dose reduction measures which will be considered in the site specific stage. Further information is addressed in Section 20.8.

Similarly, a dose assessment for the public from direct radiation and sky shine from all buildings and facilities containing radioactive sources on the UK ABWR site has been undertaken. The demonstration of ALARP for direct dose to the public (external exposure) is covered in Section 20.7. It is fundamentally similar to that for workers, and doses are demonstrated to meet the UK ABWR Nuclear Safety and Environmental Design Principles (NSEDPs) [Ref-20.11-3] Basic Safety Objective (BSO) of 20 µSv to the most exposed group.

Furthermore, measures to reduce exposure to radiation and contamination for workers during post-fault and severe accident recovery operations have been assessed (as well as a dose uptake assessment to such workers). The worker doses that have been predicted are less than the statutory requirements.

Given that radiation and contamination are unavoidable, a further part of the ALARP assessment has been to demonstrate that appropriate fixed and mobile monitoring equipment will be provided to confirm that the identified protection measures are working effectively and that internal and external exposure to workers and public exposure to external radiation are in-line with the predictions in the ALARP assessment. (The monitoring of internal doses to the public is covered in the GEP). As well are providing warnings in the event of any faults, this monitoring would give early indication of any anomalies in the design. This provides assurance that, even in the unlikely event that the protective measures were found not to be functioning as intended, investigation and corrective measures could be implemented to guarantee that worker and public doses will be ALARP.

The ALARP demonstration for radiation protection described in this PCSR chapter is supported by a set of reference documents, primarily radiation protection Topic Reports, which describe where the arguments and evidence that substantiate safety claims are presented. The Topic Reports cover radiation zoning, shielding, worker dose evaluation, public dose evaluation, radiation and contamination monitoring etc. A full list is provided within the document map in Appendix A.

Some aspects of the radiation protection strategy, for example surveys, depend on the operational programme of the future licensee. Therefore, these will be considered in detail in the site specific stage taking into account the ERIC-PD hierarchy of controls against radiological risks.

So, overall, the GDA assessments have taken the well proven Japanese ABWR design, assessed it within the UK regulatory context for radiation protection and have identified further improvements that have been incorporated to develop the UK ABWR design. These improvements include:

- An operational chemistry regime that will reduce the level of relevant risks around the plant to ALARP (and this is explained further in PCSR Chapter 23: Reactor Chemistry).
- Plant materials selected to reduce relevant risks around the plant to ALARP (and this is explained further in PCSR Chapter 23).
- Modifications to the design process for penetrations to ensure that relevant risks are ALARP.
- Changes to the scheme for radiation and contamination zoning to adopt UK good practice.
- A revised maintenance strategy using more condition based maintenance that reduces dose uptake compared to more invasive maintenance.

- Modifications to the design process for the control of contamination that captures UK and international good practice to ensure improved contamination mitigation options are adopted.
- A design change to adopt safe change HEPA filters in the HVAC system.
- Redesign of the liquid and solid waste management processing and storage facilities (including siting partially below ground).
- Adoption of a spent fuel cask stand in the cask pit which reduces operator dose for cask preparation and lid welding (as most of the flask body remains immersed in shielding water).

Through this systematic design process, sources of radiation have been minimised, suitable protection has been developed from a range of options and significant improvements adopted, dose assessments have been undertaken and the overall result is a demonstration that radiation doses to workers and to the public are, or are capable of being, as low as reasonably practicable.

20.12 Conclusions

This chapter has summarised the radiological protection safety case for the UK ABWR. It has identified the radiological hazards associated with the operation of the UK ABWR and the protection measures that have been included in the design. It has demonstrated that radiation doses to workers and to the public comply with UK legal requirements and will be as low as reasonably practicable. In addition, it has demonstrated that contamination level in the UK ABWR will also be as low as reasonably practicable.

Radiation protection measures and arrangements included in the UK ABWR have benefited from developments and improvements made over a long period of time. The UK ABWR design is therefore one that is well proven from the perspective of radiation safety and radiological protection of workers and the public.

Nevertheless, the potential for further radiological risk reduction in the UK ABWR has been considered in the light of UK good practice and the UK legal framework including IRR99 and the requirement to demonstrate that doses to workers and public are ALARP.

The first step in the ALARP assessment was to identify and quantify the radiological hazards associated with the operation of the UK ABWR. It is noted that there have been significant efforts in GDA to ensure that the source term is ALARP through careful choice of plant materials and chemistry regime from a range of potential options.

The strategy to ensure that workers and the public are adequately protected, and that doses will be ALARP, includes the radiation protection principles applied to equipment design, system and layout, radiation shielding, ventilation, designation of areas, radiation and contamination zoning and control of contamination together with the identification of risk reduction measures.

The radiation protection safety claims have been described together with the detailed arguments and evidence that substantiate them, supported by a set of reference documents, primarily radiation protection Topic Reports, which describe where the arguments and evidence that substantiate these safety claims are presented. Where relevant, reference has also been made to other GDA PCSR chapters to ensure consistency across the whole safety case.

Detailed assessments of external and internal doses to on-site workers have been undertaken for key activities. Similarly, a dose assessment for the public from direct radiation including sky shine from all buildings and facilities containing radioactive sources on the UK ABWR site has been undertaken. The effectiveness of the protection measures have been measured by comparing dose estimates against collective dose target for workers and individual dose constraints for workers and the public that are set at an appropriate fraction of the dose limits.

Some aspects of the radiation protection strategy, for example surveys regarding radiation protection, depend on the operational programme of the future licensee. Therefore, these will be considered in detail in the site specific stage taking into account the ERIC-PD hierarchy of controls against radiological risks.

So, overall, the GDA assessments for radiation protection have taken the well proven Japanese ABWR design, assessed it within the UK regulatory context and have identified further improvements which have been incorporated to develop the UK ABWR design. Through this systematic process, sources of radiation have been minimised, suitable protection has been developed, improvements adopted, dose assessments have been undertaken and the overall result is a

demonstration that radiation doses to workers and to the public, and contamination level in the UK ABWR are ALARP.

20.13 References

[Ref-20.3-1] Hitachi-GE Nuclear Energy, Ltd., "Source Term Manual General Report", GA91-9201-0003-00942 (HE-GD-0117) Rev.2, March 2017

[Ref-20.3-2] Hitachi-GE Nuclear Energy, Ltd., "Primary Source Term Methodology Report", GA91-9201-0003-00863 (WPE-GD-0184) Rev.2, July 2016

[Ref-20.3-3] Hitachi-GE Nuclear Energy, Ltd., "Process Source Term Methodology Report", GA91-9201-0003-00946 (HE-GD-5135) Rev.3, July 2016

[Ref-20.3-4] Hitachi-GE Nuclear Energy, Ltd., "Deposit Source Term Methodology Report", GA91-9201-0003-00960 (WPE-GD-0201) Rev.2, July 2016

[Ref-20.3-5] Hitachi-GE Nuclear Energy, Ltd., "End User Source Term Methodology Report", GA91-9201-0003-00976 (HE-GD-0123) Rev.1, July 2016

[Ref-20.3-6] Hitachi-GE Nuclear Energy, Ltd., "End User Source Term Value for Radiation Protection", GA91-9201-0003-01269 (HE-GD-5185) Rev.1, September 2016

[Ref-20.3-7] Hitachi-GE Nuclear Energy, Ltd., "Process Source Term Supporting Report", GA91-9201-0003-00945 (HE-GD-5136) Rev.3, July 2016

[Ref-20.3-8] Hitachi-GE Nuclear Energy, Ltd., "Topic Report of Water Movement", GA91-9201-0001-00252 (SE-GD-0555) Rev. 0, December 2016

[Ref-20.3-9] Hitachi-GE Nuclear Energy, Ltd., "Calculation of Primary Source Term Value", GA91-9201-0003-00928 (WPE-GD-0196) Rev.3, June 2016

[Ref-20.3-10] Hitachi-GE Nuclear Energy, Ltd., "Quantification of Discharges and Limits", GA91-9901-0025-00001 (HE-GD-0004) Rev. G, August 2017

[Ref-20.3-11] Hitachi-GE Nuclear Energy, Ltd., "Prospective Dose Modelling", GA91-9901-0026-00001 (HE-GD-0005) Rev. G, August 2017

[Ref-20.4-1] ICRP 2007, "The 2007 Recommendations of the International Commission on Radiological Protection", ICRP Publication 103, Ann. ICRP 37 (2-4), 2007

[Ref-20.4-2] Official Journal of the European Union, "The Council Directive 2013/59/Euratom – laying down basic safety standards for protection against the dangers arising from exposure to ionising radiation, and repealing Directives 89/618/Euratom, 90/641/Euratom, 96/29/Euratom, 97/43/Euratom and 2003/122/Euratom", 5 December 2013

[Ref-20.4-3] Statutory Instruments, "The Ionising Radiations Regulations 1999", 1999 No.3232 Health and Safety, May 2000

[Ref-20.4-4] Health and Safety Executive, "Risk management: Expert guidance, ALARP Suite of Guidance", 2017

[Ref-20.4-5] Health and Safety Executive, "Work with ionising radiation, Ionising Radiations Regulations 1999, Approved Code of Practice and guidance", 2000

[Ref-20.4-6] Office for Nuclear Regulation, "Safety Assessment Principles for nuclear Facilities", 2014

[Ref-20.4-7] Hitachi-GE Nuclear Energy, Ltd., "UK ABWR Nuclear Safety and Environmental Design Principles (NSEDPs)", GA10-0511-0011-00001 (XD-GD-0046) Rev.1, July 2017

[Ref-20.4-8] IAEA, "Radiation Protection Aspects of Design for Nuclear Power Plants", No.NS-G-1.13, 2005

[Ref-20.4-9] NEA, "Occupational Radiological Protection Principles and Criteria for Designing New Nuclear Power Plants", No.6975, 2010

[Ref-20.4-10] Hitachi-GE Nuclear Energy, Ltd., "Topic Report: Demonstration to Ensure that External and Internal Doses are ALARP for All Relevant Buildings during System Start-up, Power Operation, Normal Hot Stand-by, System Shutdown and Outages excluding ILW, LLW and SFIS", GA91-9201-0001-00119 (HE-GD-5102) Rev.2, October 2016

[Ref-20.4-11] Hitachi-GE Nuclear Energy, Ltd., "GDA ALARP Methodology", GA10-0511-0004-00001 (XD-GD-0037) Rev.1, November 2015
[Ref-20.4-12] Hitachi-GE Nuclear Energy, Ltd., "Contamination Control Philosophy", GA91-9201-0003-01231 (HE-GD-5192) Rev.2, August 2016
[Ref-20.4-13] Nuclear Energy Agency, "Occupational Exposures at Nuclear Power Plants, Twenty-first Annual Report of the ISOE Programme"
[Ref-20.4-14] United States Nuclear Regulatory Commission, "Occupational Radiation Exposure at Commercial Nuclear Power Reactors and Other Facilities (NUREG-0713)"
[Ref-20.4-15] Nuclear Regulation Authority, "Nuclear Regulation Authority Annual Report"
[Ref-20.4-16] European Utility Requirement, "European Utility Requirements for LWR Nuclear Power Plants, Volume 2"

[Ref-20.5-1] Hitachi-GE Nuclear Energy, Ltd., "Topic Report: Demonstration to Ensure that External and Internal Doses are ALARP for All Relevant Buildings during System Start-up, Power Operation, Normal Hot Stand-by, System Shutdown and Outages excluding ILW, LLW and SFIS", GA91-9201-0001-00119 (HE-GD-5102) Rev.2, October 2016
[Ref-20.5-2] Hitachi-GE Nuclear Energy, Ltd., "Topic Report: Radiation and Contamination Zoning for All Relevant Buildings during System Start-up, Power Operation, Normal Hot Stand-by, System Shutdown and Outages excluding ILW, LLW and SFIS", GA91-9201-0001-00116 (HE-GD-5085) Rev.3, October 2016
[Ref-20.5-3] Statutory Instruments, "The Ionising Radiations Regulations 1999", 1999 No.3232 Health and Safety, May 2000
[Ref-20.5-4] Health and Safety Executive, "Work with ionising radiation, Ionising Radiations Regulations 1999, Approved Code of Practice and guidance", 2000
[Ref-20.5-5] Statutory Instruments, "Environmental Protection, England and Wales, The Environmental Permitting (England and Wales) Regulations 2016", December 2016
[Ref-20.5-6] Hitachi-GE Nuclear Energy, Ltd., "Topic Report: Radiation Shielding for All Relevant Buildings during System Start-up, Power Operation, Normal Hot Stand-by, System Shutdown and Outages excluding ILW, LLW and SFIS", GA91-9201-0001-00109 (HE-GD-5084) Rev.2, October 2016

[Ref-20.6-1] Hitachi-GE Nuclear Energy, Ltd., "Prospective Dose Modelling", GA91-9901-0026-00001 (HE-GD-0005) Rev. G, August 2017
[Ref-20.6-2] Hitachi-GE Nuclear Energy, Ltd., "Topic Report on Neutron Monitoring System", GA91-9201-0001-00054 (3E-GD-B017) Rev. 2, July 2017
[Ref-20.6-3] Hitachi-GE Nuclear Energy, Ltd., "Topic Report on Safety Process Radiation Monitoring System", GA91-9201-0001-00115 (3E-GD-K053) Rev. 3, July 2017
[Ref-20.6-4] Hitachi-GE Nuclear Energy, Ltd., "Topic Report on Process Radiation Monitoring System (Containment Radiation Monitor)", GA91-9201-0001-00162 (3E-GD-K109) Rev. 1, March 2017
[Ref-20.6-5] Hitachi-GE Nuclear Energy, Ltd., "Topic Report on Process Radiation Monitoring System (Discharge Radiation Monitor): Part of Basis of Safety Cases on Other Control and Instrumentation System", GA91-9201-0001-00254 (3E-GD-K154) Rev. 1, June 2017
[Ref-20.6-6] Hitachi-GE Nuclear Energy, Ltd., "Topic Report on Process Radiation Monitoring System (Off-gas System Area Airborne Radiation Monitor)", GA91-9201-0001-00255 (3E-GD-K153) Rev. 0, March 2017
[Ref-20.6-7] Hitachi-GE Nuclear Energy, Ltd., "Topic Report on Fault Assessment for SFP and Fuel Route", GA91-9201-0001-00082 (AE-GD-0229) Rev. 3, July 2017

[Ref-20.6-8] Hitachi-GE Nuclear Energy, Ltd., "Consideration of Fault for Spent Fuel Export and Spent Fuel Interim Storage", GA91-9201-0003-00526 (FRE-GD-0057) Rev. 4, June 2017

[Ref-20.6-9] Statutory Instruments, "The Ionising Radiations Regulations 1999", 1999 No.3232 Health and Safety, May 2000

[Ref-20.6-10] Council of the European Union, "Council Directive 96/29/Euratom of 13 May 1996 laying down basic safety standards for the protection of the health of workers and the general public against the dangers arising from ionizing radiation", Official Journal of the European Communities No L159/1, 1996

[Ref-20.6-11] Health and Safety Executive, "Work with ionising radiation, Ionising Radiations Regulations 1999, Approved Code of Practice and guidance", 2000

[Ref-20.6-12] International Atomic Energy Agency, "Radiation Protection Aspects of Design for Nuclear Power Plants", NS-G-1.13, 2005

[Ref-20.6-13] International Atomic Energy Agency, "Radiation Protection and Radioactive Waste Management in the Operation of Nuclear Power Plants", NS-G-2.7, 2002

[Ref-20.6-14] International Atomic Energy Agency, "Radiation Protection and Safety of Radiation Sources: International Basic Safety Standards", GSR Part 3, 2014

[Ref-20.6-15] Hitachi-GE Nuclear Energy, Ltd., "GDA Safety Case Development Manual", GA10-0511-0006-00001 (XD-GD-0036) Rev. 3, June 2017

[Ref-20.6-16] Hitachi-GE Nuclear Energy, Ltd., "Topic Report on Radiation and Contamination Monitoring of Occupational Exposure: Part of Basis of Safety Cases on Other Control and Instrumentation System", GA91-9201-0001-00136 (3E-GD-K049) Rev. 3, July 2017

[Ref-20.7-1] Hitachi-GE Nuclear Energy, Ltd., "Prospective Dose Modelling", GA91-9901-0026-00001 (HE-GD-0005) Rev.G, August 2017

[Ref-20.7-2] Hitachi-GE Nuclear Energy, Ltd., "Topic Report: Public Dose Evaluation from Direct Radiation for All Relevant Buildings, ILW, LLW and SFIS during System Start-up, Power Operation, Normal Hot Stand-by, System Shutdown and Outages", GA91-9201-0001-00121 (HE-GD-5108) Rev.3, July 2016

[Ref-20.7-3] IRAT Part 1 Environment Agency, "Initial Radiological Assessment Methodology – Part 1 User Report Science Report", SC030162/SR1, May 2006

[Ref-20.7-4] IRAT Part 2 Environment Agency, "Initial Radiological Assessment Methodology – Part 2 Methods and Input Data Science Report", SC030162/SR2, May 2006

[Ref-20.7-5] Health Protection Agency, "The methodology for assessing the radiological consequences of routine releases of radionuclides into the environment used in PC-CREAM 08(R)", HPA-RPD-058, November 2009

[Ref-20.8-1] Hitachi-GE Nuclear Energy, Ltd., "Genesis of ABWR design", GA91-9901-0034-00001 (XE-GD-0136) Rev.A, January 2014

[Ref-20.8-2] Hitachi-GE Nuclear Energy, Ltd., "Hitachi-GE UK ABWR Concept Design", GA91-9901-0033-00001 (XE-GD-0135) Rev.A, January 2014

[Ref-20.8-3] Hitachi-GE Nuclear Energy, Ltd., "Topic Report: Worker Dose Evaluation for All Relevant Buildings during System Start-up, Power Operation, Normal Hot Stand-by, System Shutdown and Outages excluding ILW, LLW and SFIS", GA91-9201-0001-00120 (HE-GD-5107) Rev.2, October 2016

[Ref-20.8-4] Hitachi-GE Nuclear Energy, Ltd., "UK ABWR Nuclear Safety and Environmental Design Principles (NSEDPs)", GA10-0511-0011-00001 (XD-GD-0046) Rev.1, July 2017

[Ref-20.8-5] Japan Nuclear Energy Safety Organisation, "Operational Status of Nuclear Facilities in Japan"

(http://warp.da.ndl.go.jp/info:ndljp/pid/2942753/www.jnes.go.jp/english/database/index2.html) August 2017

[Ref-20.8-6] The Industry Radiological Protection Co-ordination Group (IRPCG), "A Nuclear Industry Good Practice Guide, The Application of ALARP to Radiological Risk", Rev.1, December 2012

[Ref-20.8-7] Hitachi-GE Nuclear Energy, Ltd., "GDA ALARP Methodology", GA10-0511-0004-00001 (XD-GD-0037) Rev.1, November 2015

[Ref-20.9-1] HM Stationery Office, "The Radiation (Emergency Preparedness and Public Information) Regulations 2001" (REPPIR). Statutory Instrument 2001 No. 2975. ISBN 0-11-029908-6, August 2001

[Ref-20.9-2] Office for Nuclear Regulation, "Licence Condition Handbook", October 2014

[Ref-20.9-3] HM Stationery Office, "The Ionising Radiations Regulations 1999", Statutory Instrument 1999 No. 3232, ISBN 0-11-085614-7, December 1999

[Ref-20.9-4] Health and Safety Executive, "Provisional HSE Internal Guidance on Dose Levels for Emergencies", REPPIR Regulations 14(2), (3) & (4), August 2001

[Ref-20.9-5] Hitachi-GE Nuclear Energy Ltd., "Topic Report on Design Basis Analysis", GA91-9201-0001-00023 (UE-GD-0219) Rev.14, August 2017

[Ref-20.9-6] Hitachi-GE Nuclear Energy Ltd., "Topic Report of Post Accident Accessibility for DBA", GA91-9201-0001-00216 (HE-GD-0080) Rev.1, October 2016

[Ref-20.9-7] Hitachi-GE Nuclear Energy Ltd., "Topic Report on Fault Assessment", GA91-9201-0001-00022 (UE-GD-0071) Rev.6, July 2017

[Ref-20.9-8] Hitachi-GE Nuclear Energy, Ltd., "Topic Report on Severe Accident Phenomena and Severe Accident Analysis", GA91-9201-0001-00024 (AE-GD-0102), Rev. H, April 2017

[Ref-20.9-9] Hitachi-GE Nuclear Energy Ltd., "Topic Report of Post Accident Accessibility for SA", GA91-9201-0001-00223 (HE-GD-0225) Rev.1, October 2016

[Ref-20.9-10] Hitachi-GE Nuclear Energy, Ltd., "Methodology Report on Post Accident Accessibility", GA91-9201-0003-00695 (HE-GD-0081) Rev.0, April 2015

[Ref-20.10-1] Statutory Instruments, "The Ionising Radiations Regulations 1999", 1999 No.3232 Health and Safety, May 2000

[Ref-20.10-2] Hitachi-GE Nuclear Energy, Ltd., "UK ABWR Nuclear Safety and Environmental Design Principles (NSEDPs)", GA10-0511-0011-00001 (XD-GD-0046) Rev.1, July 2017

[Ref-20.10-3] Hitachi-GE Nuclear Energy, Ltd., "Topic Report: Worker Dose Evaluation for All Relevant Buildings during System Start-up, Power Operation, Normal Hot Stand-by, System Shutdown and Outages excluding ILW, LLW and SFIS", GA91-9201-0001-00120 (HE-GD-5107) Rev.2, October 2016

[Ref-20.10-4] Hitachi-GE Nuclear Energy, Ltd., "Locations, Nature and Extent in relation to Radiation and Contamination", GA91-9201-0003-01286 (HE-GD-5195) Rev.2, September 2016

[Ref-20.10-5] Hitachi-GE Nuclear Energy, Ltd., "Topic Report: Radiation and Contamination Zoning for All Relevant Buildings during System Start-up, Power Operation, Normal Hot Stand-by, System Shutdown and Outages excluding ILW, LLW and SFIS", GA91-9201-0001-00116 (HE-GD-5085) Rev.3, October 2016

[Ref-20.10-6] Hitachi-GE Nuclear Energy, Ltd., "Topic Report: Radiation Shielding for All Relevant Buildings during System Start-up, Power Operation, Normal Hot Stand-by, System Shutdown and Outages excluding ILW, LLW and SFIS", GA91-9201-0001-00109 (HE-GD-5084) Rev.2, October 2016

[Ref-20.10-7] Hitachi-GE Nuclear Energy, Ltd., "UK ABWR Penetration Design Rule", GA91-9201-0003-01657 (HE-GD-5230) Rev.0, October 2016

[Ref-20.10-8] Hitachi-GE Nuclear Energy, Ltd., "Source Term Manual General Report", GA91-9201-0003-00942 (HE-GD-0117) Rev.2, March 2017

[Ref-20.10-9] Hitachi-GE Nuclear Energy, Ltd., "Topic report of Post Accident Accessibility for DBA", GA91-9201-0001-00216 (HE-GD-0080) Rev.1, October 2016

[Ref-20.10-10] Hitachi-GE Nuclear Energy, Ltd., "Topic report of Post Accident Accessibility for SA", GA91-9201-0001-00223 (HE-GD-0225) Rev.1, October 2016

[Ref-20.10-11] Hitachi-GE Nuclear Energy, Ltd., "Topic Report: Public Dose Evaluation from Direct Radiation for All Relevant Buildings, ILW, LLW and SFIS during System Start-up, Power Operation, Normal Hot Stand-by, System Shutdown and Outages", GA91-9201-0001-00121 (HE-GD-5108) Rev.3, July 2016

[Ref-20.10-12] Hitachi-GE Nuclear Energy, Ltd., "UK ABWR Design Strategy for Access Control to High Dose Rate and High Dose Areas", GA91-9201-0003-01628 (HE-GD-5250) Rev.0, September 2016

[Ref-20.11-1] Hitachi-GE Nuclear Energy, Ltd., "GDA ALARP Methodology", GA10-0511-0004-00001 (XD-GD-0037) Rev.1, November 2015

[Ref-20.11-2] Hitachi-GE Nuclear Energy, Ltd., "GDA Safety Case Development Manual", GA10-0511-0006-00001 (XD-GD-0036) Rev.3, June 2017

[Ref-20.11-3] Hitachi-GE Nuclear Energy, Ltd., "UK ABWR Nuclear Safety and Environmental Design Principles (NSEDPs)", GA10-0511-0011-00001 (XD-GD-0046) Rev.1, July 2017

Appendix A: Document Map for Supporting Evidence

Claim

Top Claim

RP-C1	RP-C2	-
Dose in Normal Operation is ALARP and meets Regulatory Requirements		
Worker (External / Internal Doses)	Public (External Dose)	Public (Internal Dose)

Evidence / Argument

Radiation Protection ALARP Methodology (including All Relevant RP Arguments)

Strategy to Ensure that the Exposure is ALARP	GEP (Generic Environmental Permit)
Section 20.4: Strategy to Ensure that the Exposure is ALARP	
Topic Report: Demonstration to Ensure that the Exposure is ALARP [Ref-20.4-10]	

Main Radiation Protection Provisions (Specific RP Arguments)

Source Term for Radiation Protection	Radiation and Contamination Zoning	Radiation Shielding	Radiation and Contamination Monitoring	Others
Section 20.3: Definition of Radioactive Sources	Section 20.5: Protection and Provisions against Direct Radiation and Contamination	Section 20.5: Protection and Provisions against Direct Radiation and Contamination	Section 20.6: Radiation and Contamination Monitoring of Occupational Exposure	Section 20.5: Protection and Provisions against Direct Radiation and Contamination
End User Source Term Value for Radiation Protection [Ref-20.3-6]	Topic Report: Radiation and Contamination Zoning [Ref-20.5-2]	Topic Report: Radiation Shielding [Ref-20.5-6]	Topic Report: Radiation and Contamination Monitoring [Ref-20.6-16]	Topic Report: Demonstration to Ensure that the Exposure is ALARP [Ref-20.5-1]

Dose Assessment

Worker Dose Assessment	Public Dose Assessment
Section 20.8: Worker Dose Assessment	Section 20.7: Dose Assessment for the Public from Direct Radiation
Topic Report: Worker Dose Assessment [Ref-20.8-3]	Topic Report: Public Dose Assessment from Direct Radiation [Ref-20.7-2]

Figure A-1: Document Map for Radiation Protection Safety Reports (Start-up, Power Operation, Shutdown and Refuelling Outages: Normal Operation)

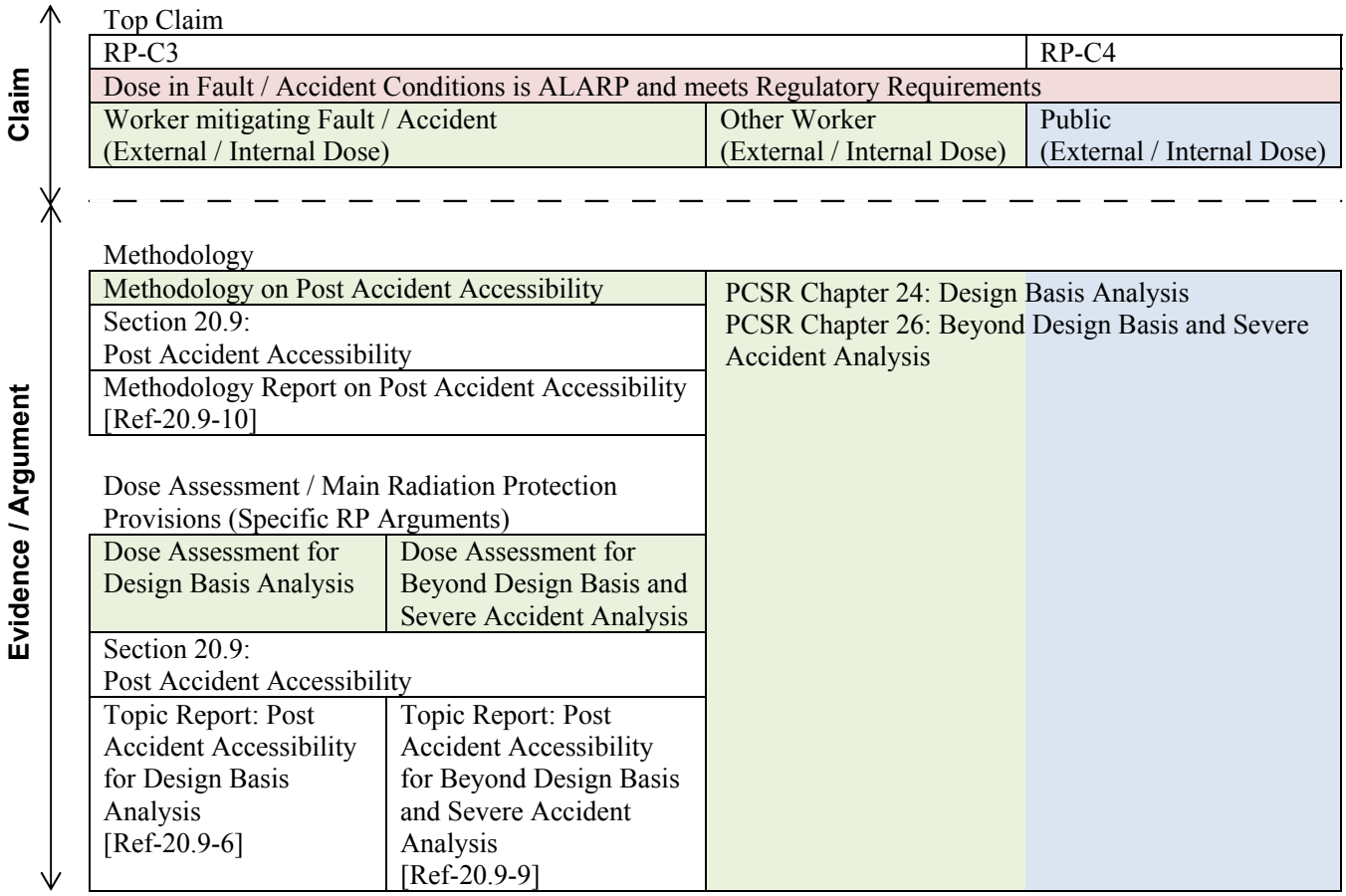

Figure A-2: Document Map for Radiation Protection Safety Reports (Start-up, Power Operation, Shutdown and Refuelling Outages: Fault / Accident Conditions)

Appendix B: Key Links with Other PCSR Chapters

Table B-1: Key Links with Other PCSR Chapters

Radiation Protection Safety Case - Relevant PCSR Chapters

Building	Plant Status	Plant Condition	Source Term	Provisions against Direct Radiation and Contamination	Dose Evaluation
All Buildings and Facilities (except for ILW/LLW and SFIS Facilities)	Start-up Power Operation Shutdown Outages	Normal Operation (Normal Condition)	**20 (Source Term for RP)** 11 (Reactor Core) 18 (Source Term for RW) GEP (Source Term for Discharge) 23 (Reactor Chemistry)	**20 (Design Principles / Features)** Relevant Chapters and Relevant Topics of Chapter 20 are: 4,5 - Radiation Protection Design Approach 8 - Material Selection 9 - Basic Technical Characteristics and Plant Arrangement 10 - Radiation Shielding 12, 13, 16, 17 - Systems in relation to Radiation Protection 14 - Radiation and Contamination Monitoring 15 - Lighting at Working Area in Designated Area 18 - Radioactive Waste Management 19 - Radiation Protection Measures around SFP 21 - MCR Design 23 - Reactor Chemistry 27 - Environmental Conditions including Maintenance Space in Designated Area 28 - Holistic ALARP Demonstration 29 - Commissioning Survey 30 - Operation Strategy	**20 (External and Internal Dose to Workers / External Dose to Public)** GEP (Internal Dose to Public)
		Fault / Accident Conditions	24 (Source Term for DBA) 26 (Source Term for BDBA/SAA)	**20 (Design Features for Post Accident Accessibility)** 22 (Emergency Preparedness) 24 (Design Features for DBA) 26 (Design Features for BDBA/SAA)	**20 (Dose Assessment for Post Accident Accessibility)** 24 (Dose Assessment for DBA) 26 (Dose Assessment for BDBA/SAA)
	Decommissioning	Normal Operation (Normal Condition) Fault / Accident Conditions	31 (Source Term for Decommissioning)	**20 (Design Principles / Features)** 31 (Design for Decommissioning)	31 (Summary of ALARP Justification)
ILW / LLW Facilities	Transfer Storage	Normal Operation (Normal Condition) Fault / Accident Conditions	18 (Source Term for ILW/LLW)	**20 (Design Principles / Features)** 18 (ILW/LLW Specification)	18 (Dose Assessment for ILW/LLW)
SFIS Facility	Transfer Storage	Normal Operation (Normal Condition) Fault / Accident Conditions	32 (Source Term for SFIS)	**20 (Design Principles / Features)** 32 (SFIS Specification)	32 (Dose Assessment for SFIS)

*Acronyms - ILW: Intermediate Level Waste, LLW: Low Level Waste, SFIS: Spent Fuel Interim Storage, RP: Radiation Protection, RW: Radioactive Waste, GEP: Generic Environmental Permit, DBA: Design Basis Analysis, BDBA, Beyond Design Basis Analysis, SAA: Severe Accident Analysis, SFP: Spent Fuel Pool, MCR: Main Control Room

Appendix C: Representative Safety Functional Claims in relation to Radiation Protection

The Safety Functional Claims (SFCs) in relation to Radiation Protection are covered in other chapters from system, mechanical and/or civil engineering perspective.

The representative SFCs in relation to Radiation Protection are summarised in the following table.

Table C-1: Representative Safety Functional Claims in relation to Radiation Protection

Representative Radiation Protection Topics	PCSR Chapter	SFC Claim ID	SFC Summary	Relevant SSC	Category and Class
Radiation Shielding	10	R/B SFC 4-7.03	Shielding by concrete walls and slabs	Shielding of R/B	A1
		T/B SFC 4-7.01		Shielding of T/B	B2
		C/B SFC 4-7.01		Shielding of C/B	A1
	17	TG SFC 4-7.1	Shielding around High Pressure Turbine	Shielding around HPT	C3
		ES SFC 4-7.1	Shielding around Cross-Around Pipes at Low Pressure Turbine	Shielding around Cross-Around Pipes	C3
	19	SFS SFC 4-7.2	Shielding by SFP water	Shielding by SFP water	A1
Containment of Radioactive Materials	12	RPV SFC 4-1.1	RPV providing a pressure boundary to contain the reactor coolant, nuclear fuel and fission products	RPV	A1
		CUW SFC 4-1.1	Containment of reactor coolant by the system portions within the Reactor Coolant Pressure Boundary (RCPB)	CUW	A1
		RHR SFC 4-1.1		RHR	A1
		CUW SFC 4-3.1	Containment of reactor coolant by the system piping and components outside the RCPB	CUW	B3
		RHR SFC 4-3.1		RHR	B3
	10	R/B SFC 4-7.01	Containment by RCCV	RCCV	A1
Ventilation	16	R/A HVAC SFC 4-7.1	Ventilation by HVAC for normal operation	HVAC of R/A	C3
		T/B HVAC SFC 4-7.1		HVAC of T/B	C3
	13	SGTS SFC 4-7.2	A part of confinement by SGTS for fault condition	SGTS	B2
Water Chemistry Control	12	CUW SFC 5-8.1	Purifying treatment of reactor water	CUW	C3
	19	FPC SFC 5-	Maintaining quality of	FPC	C3

Representative Radiation Protection Topics	PCSR Chapter	SFC Claim ID	SFC Summary	Relevant SSC	Category and Class
		9.1	water in SFP		
Drain	16	RD SFC 4-12.1	Providing sufficient capacity to transfer liquid waste to the LWMS for normal operation	RD	C3
Radioactive Waste Management	18	OG SFC 4-11.1	Minimising the release of radioactivity to the environment during the start-up, power and shutdown operations	OG	C3
Radiation and Contamination Monitoring of Occupational Exposure	14	OCIS SFC 5-14.1	Site boundary monitoring under fault conditions	Monitoring post	C3
		OCIS SFC 5-23.1	Area monitoring, Personal dose monitoring, Site boundary monitoring during normal operation	Area monitor, Personal dosimeter, Monitoring post	C3
Post Accident Accessibility*	16	EPS SFC 5-2.1	Power supply of EDGs in the event of LOOP and LOCA associated with LOOP	LOT	A1
		EPS SFC 5-3.1	Power supply of BBGs in the event of LOOP and LOCA associated with LOOP	LOT	A2
		FLSR SFC 2-2.1	Prevention of significant core damage and minimisation of core reaction	FLSR	B3
		FLSR SFC 4-7.1	Confinement of radioactive materials within the primary containment boundary and Prevention of its dispersion to the environment	FLSR	A1

*: The LOT and FLSR are selected as mitigatory SSCs during DBA and SA in PCSR Chapter 20.9. Therefore, these SSCs are extracted as targets of representative SFCs in this appendix.